136618022_C
P0000300002231
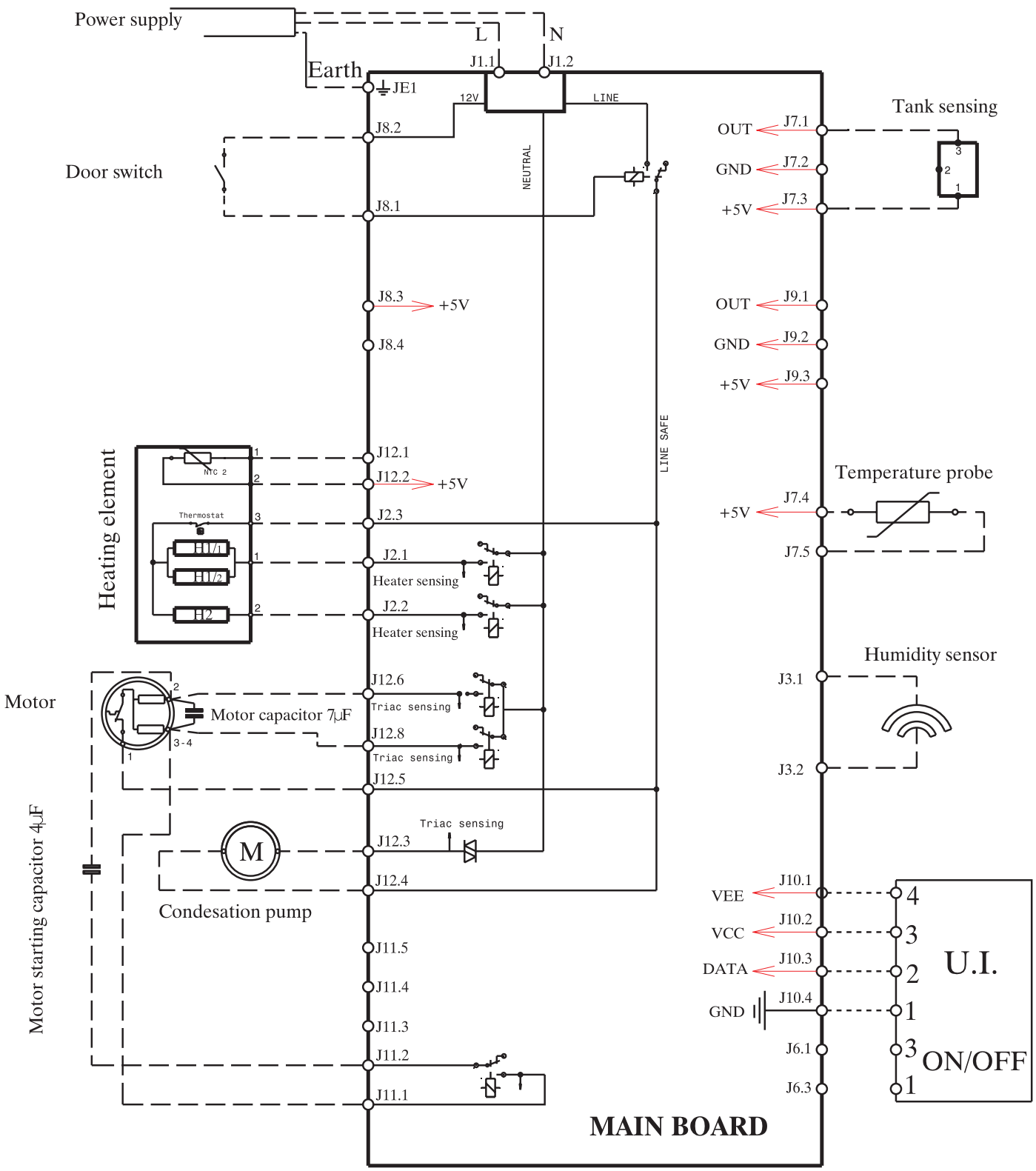
ELECTRIC DIAGRAM