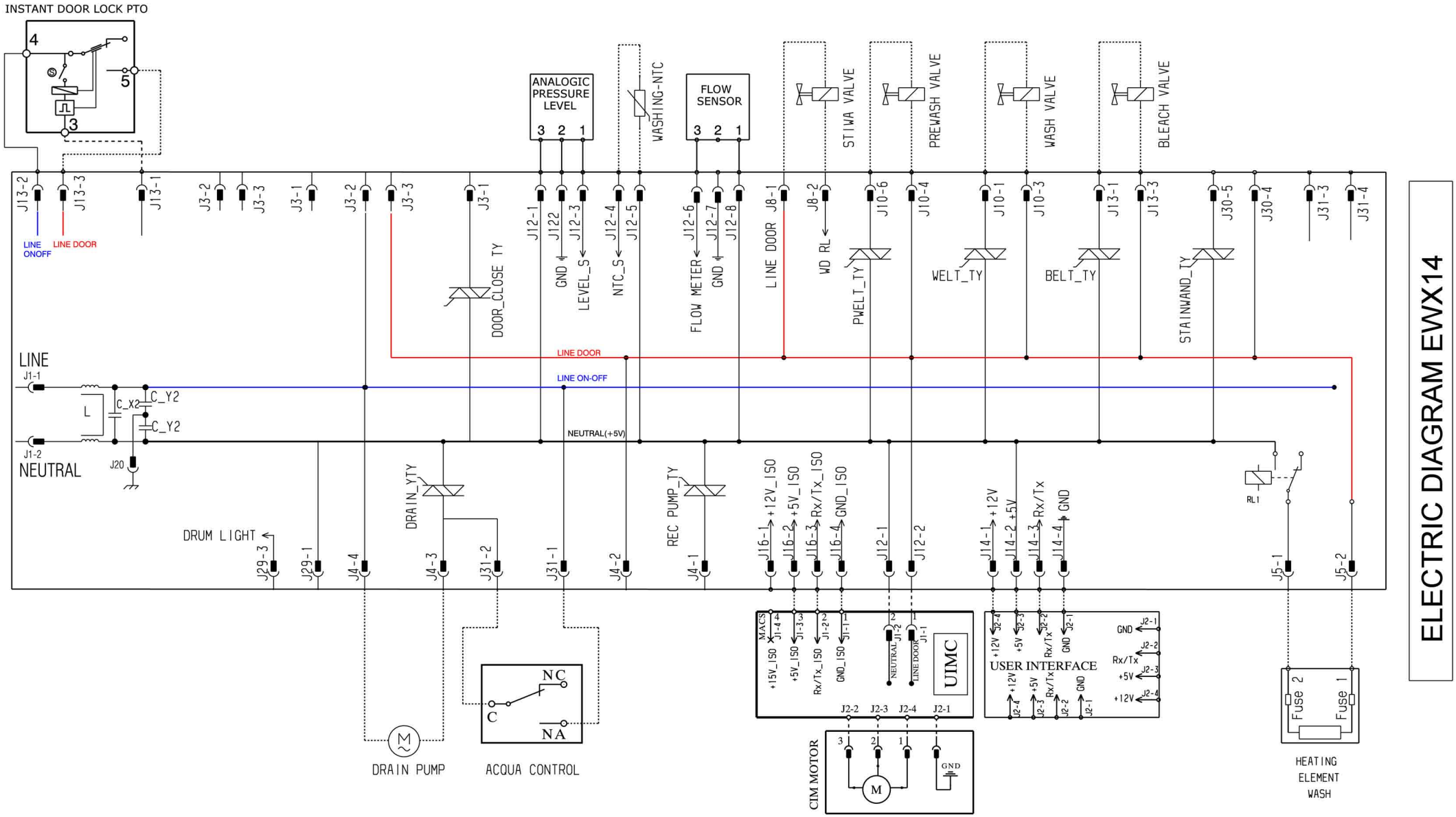A01539337_C
P0000300002095