MAIN BOARD : ELECTRIC DIAGRAM
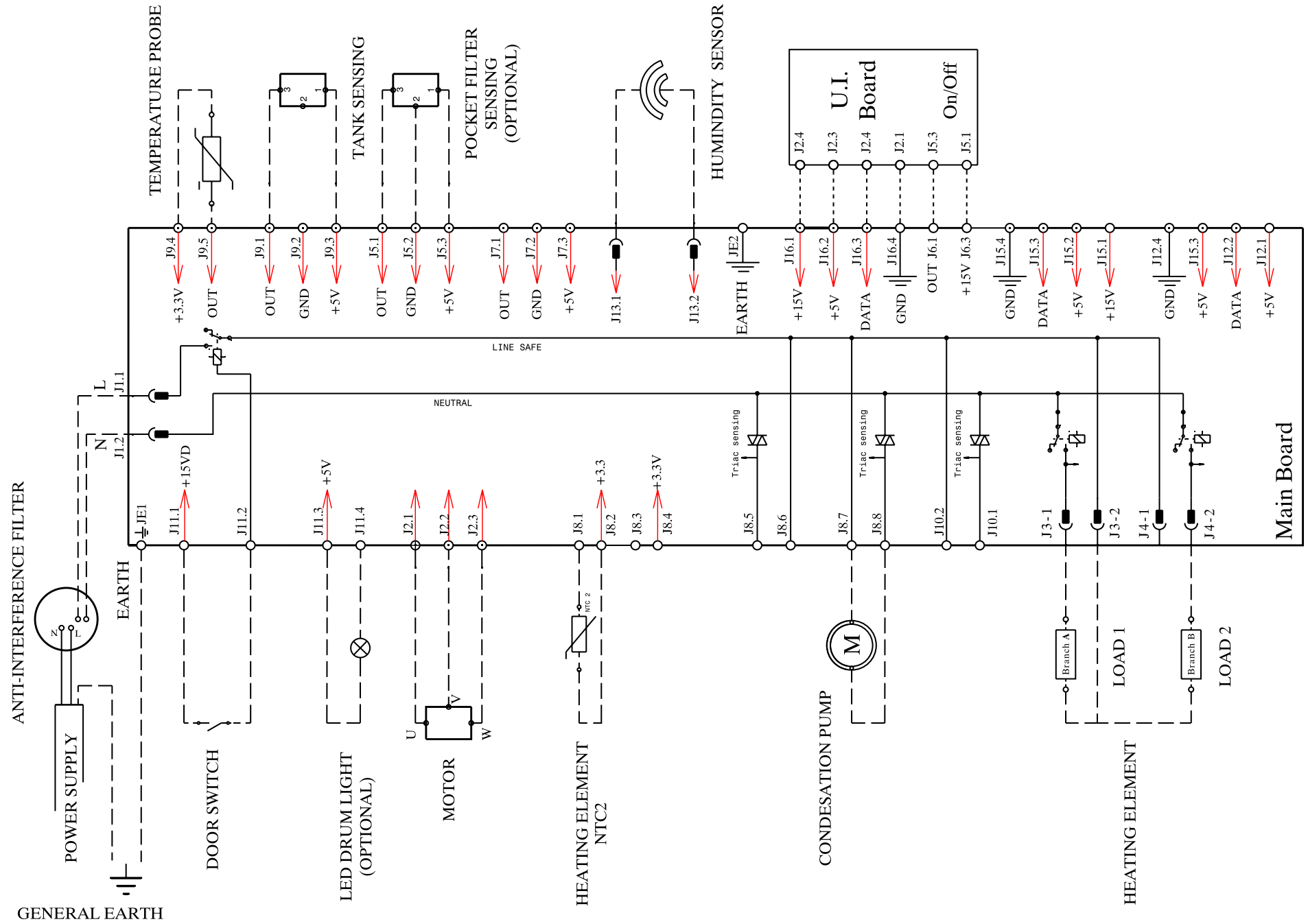
A01523603_C
P0000300002065