A01539330_B
P0000300002049
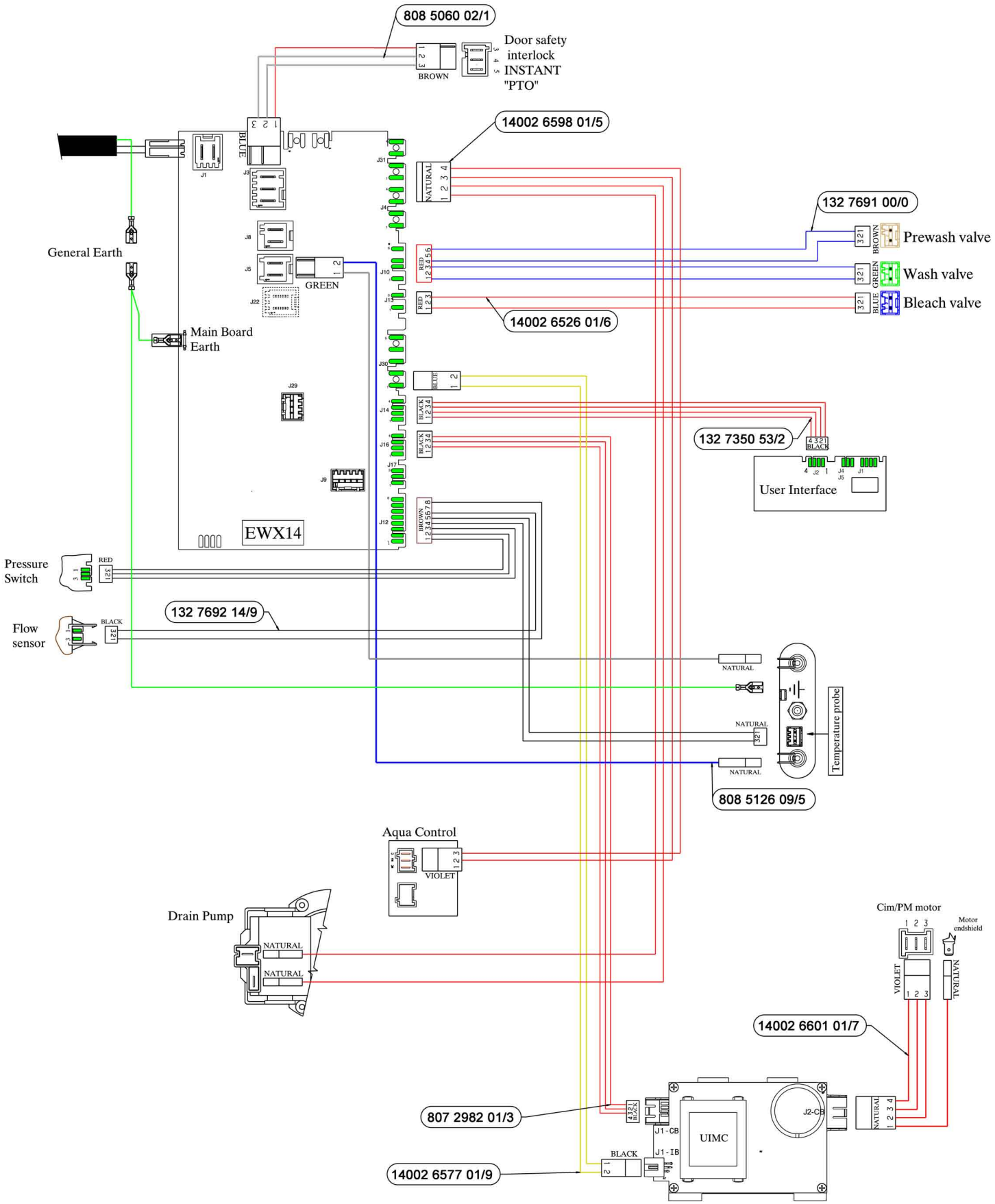
WIRING HARNESSES