A04626201_B
P0000300001998
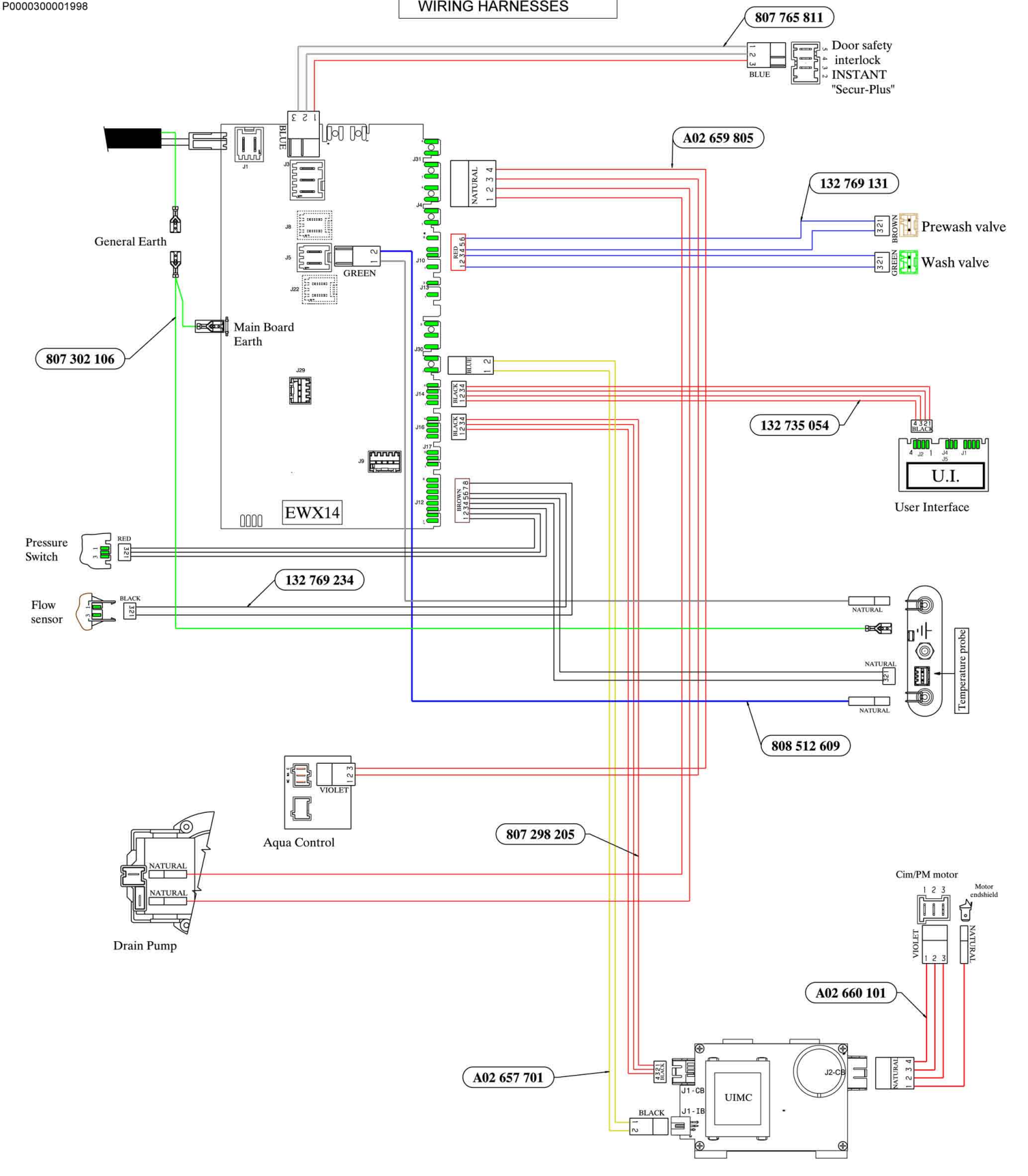
WIRING HARNESSES