807286178_C
P0000300001951

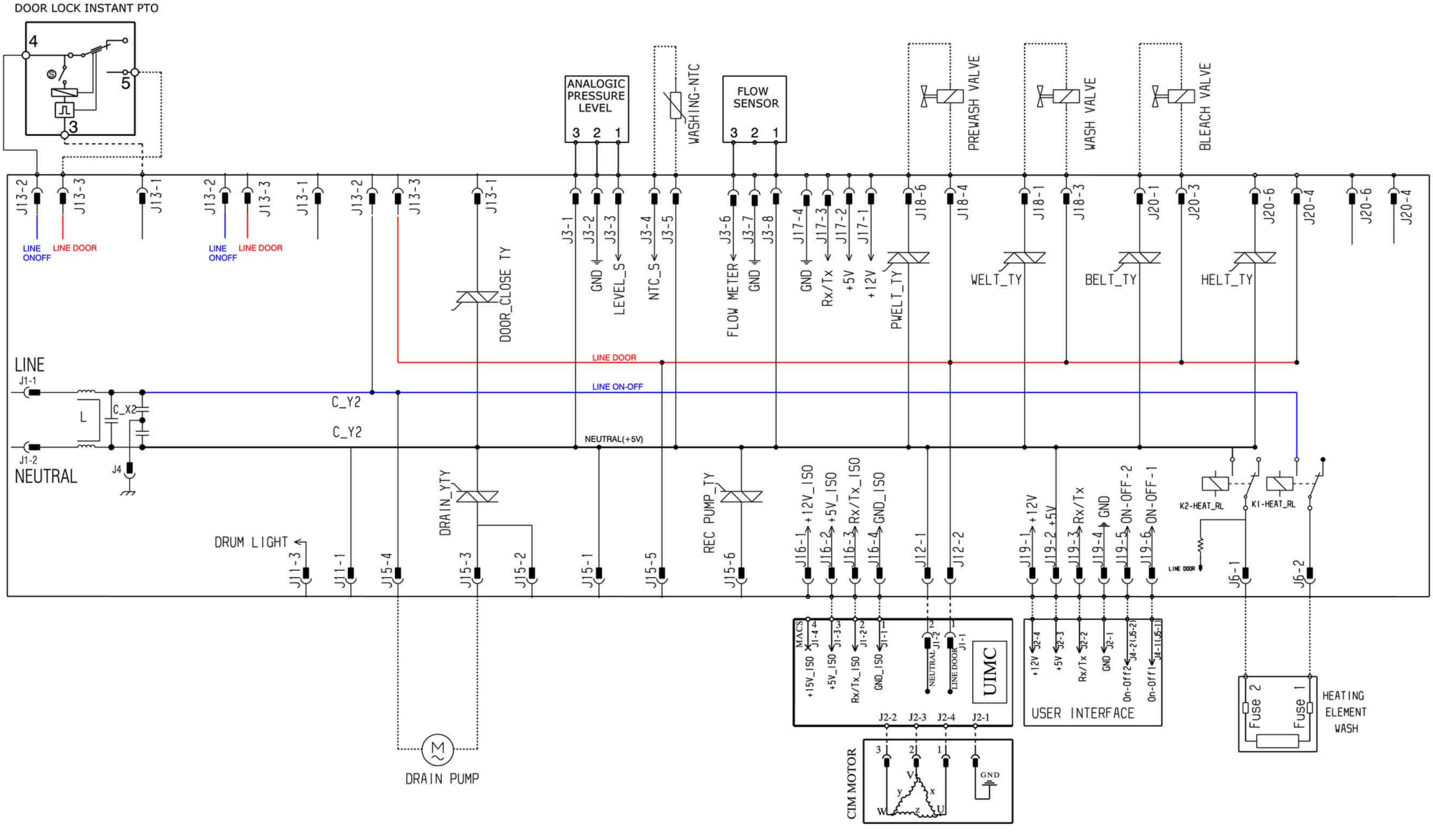

ELECTRIC DIAGRAM EWX11