A00203937_B
P0000300001907
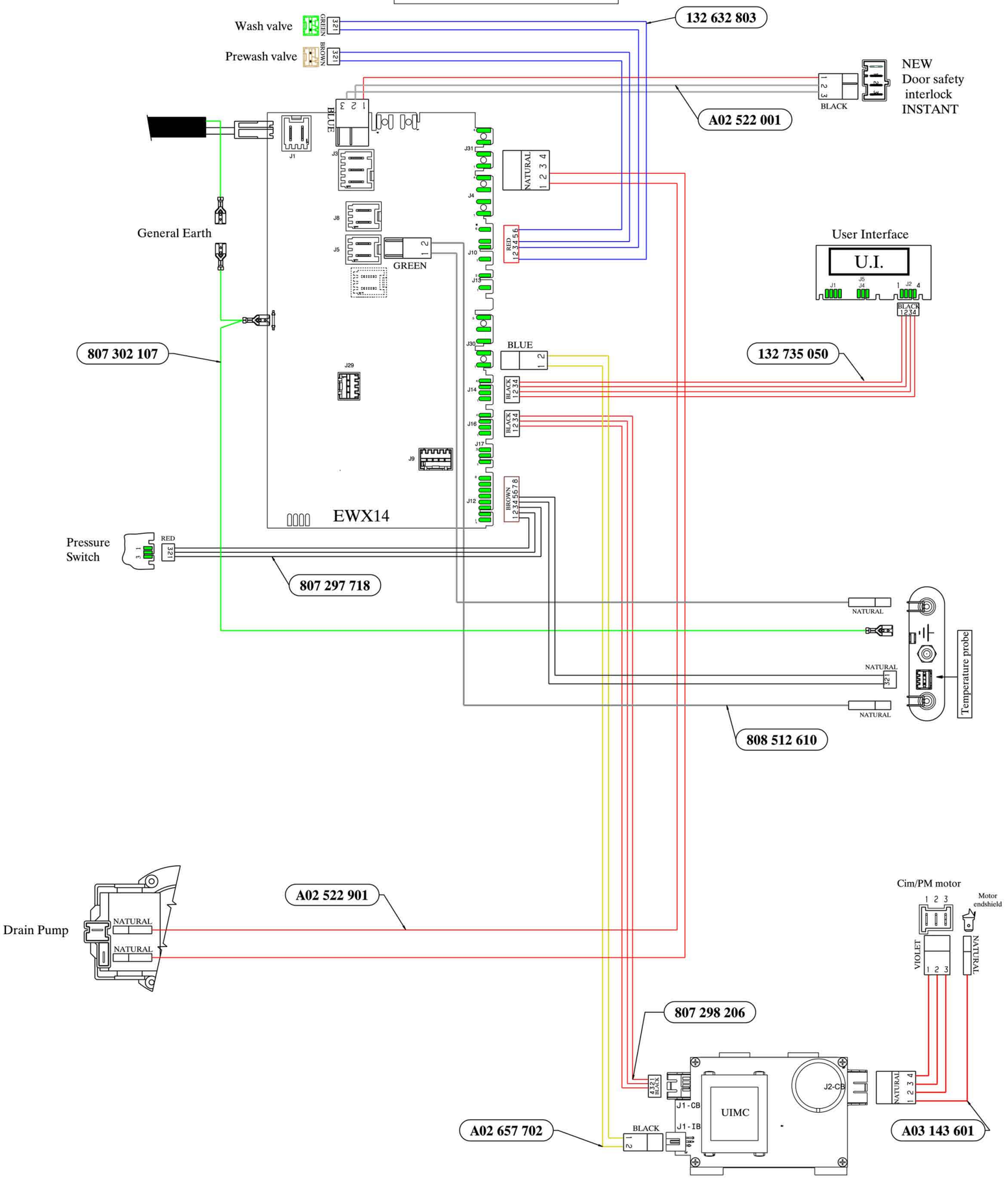
WIRING HARNESSES