ELECTRIC DIAGRAM
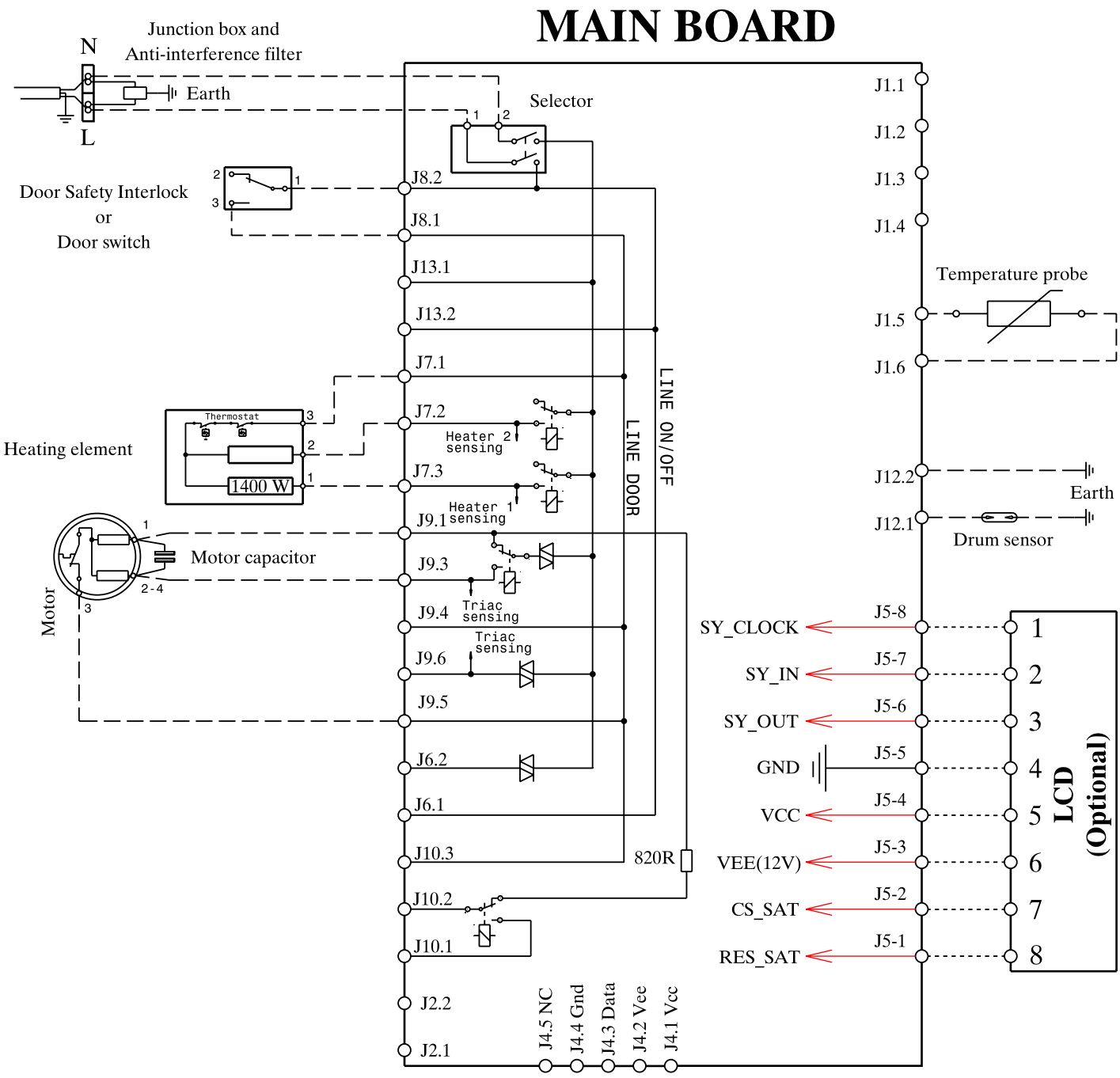
A01464201_C
P0000300001867