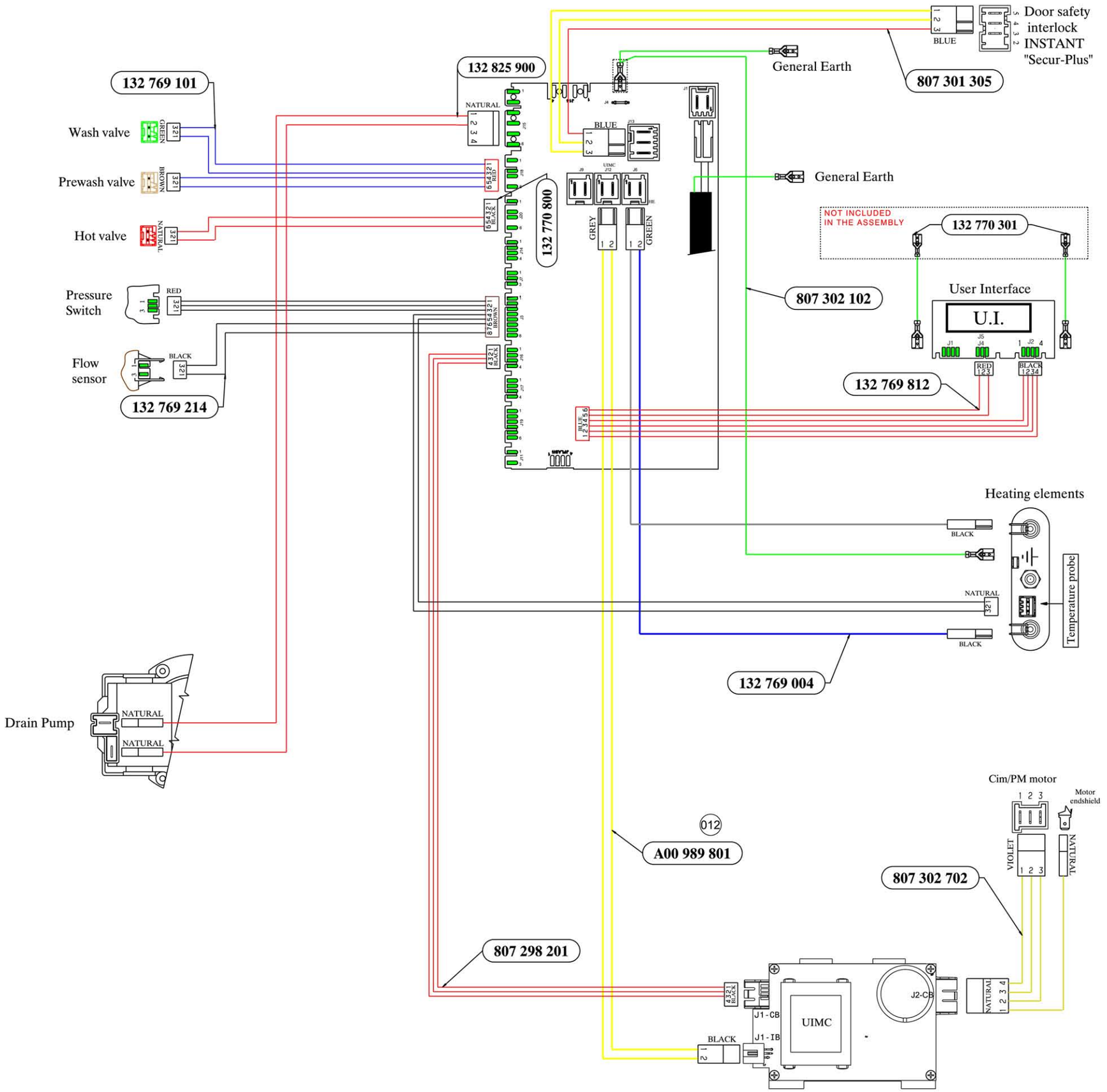WIRING HARNESSES