WIRING HARNESSES
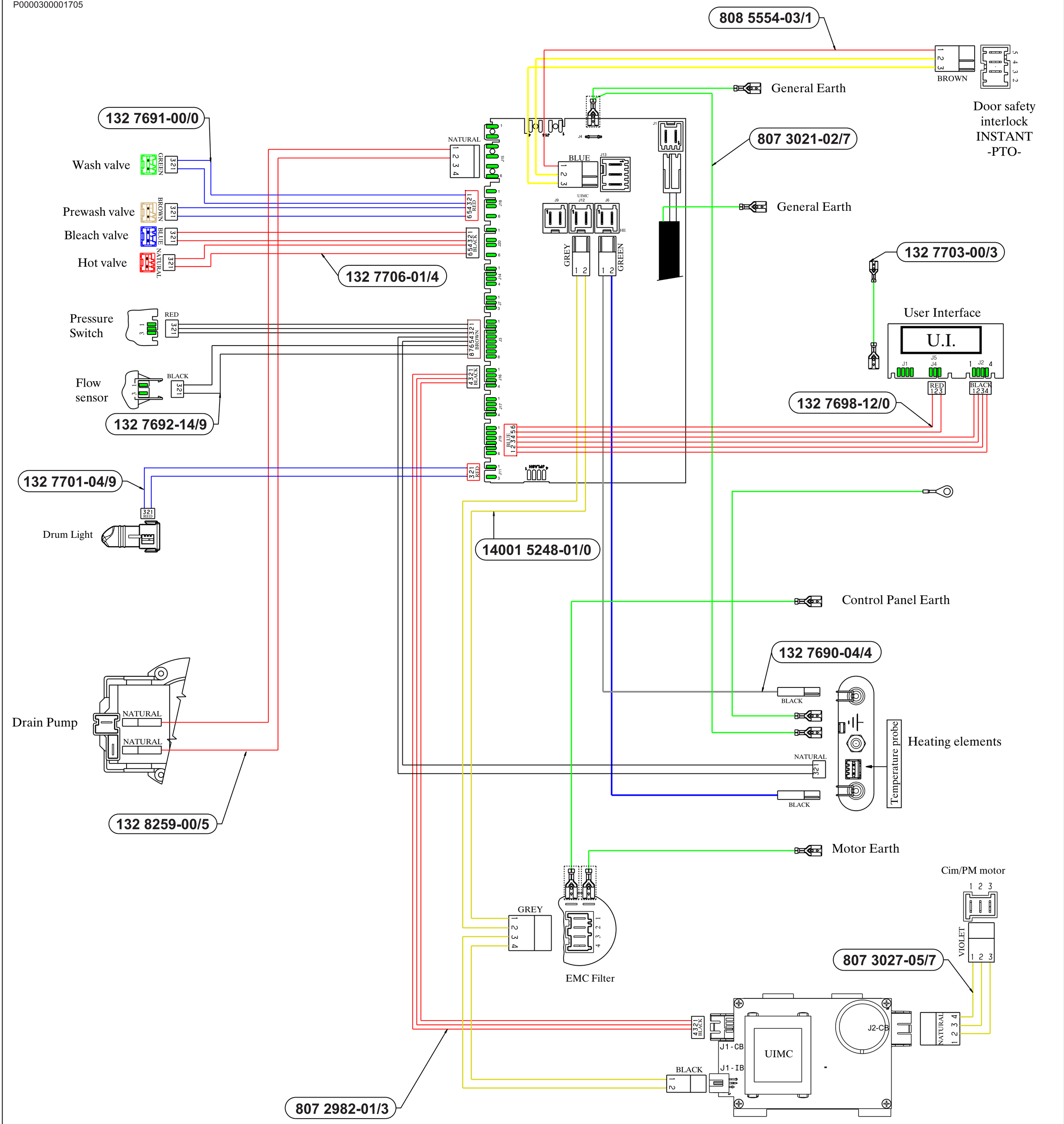
A01209101_B
P0000300001705