WIRING HARNESS
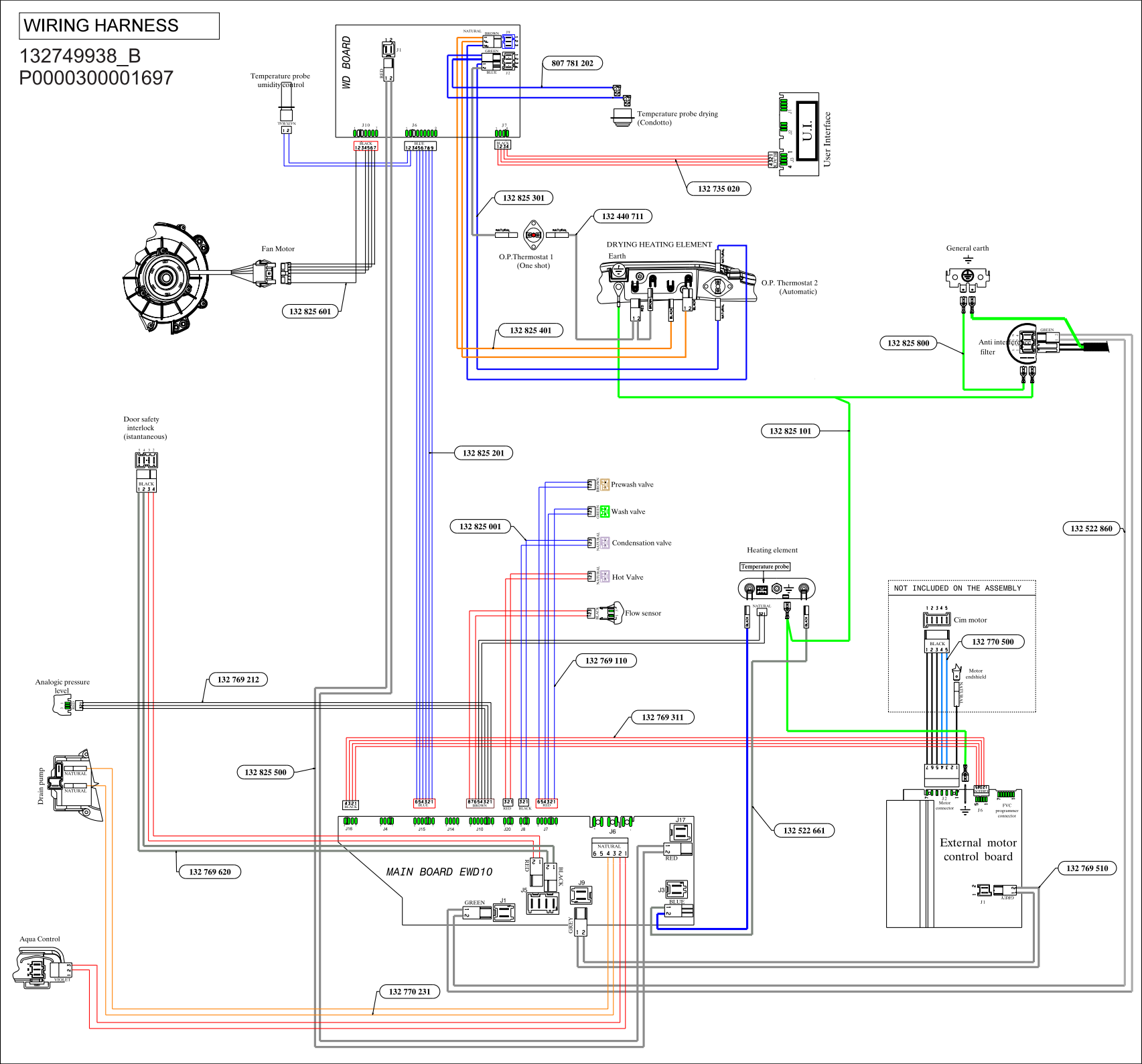
132749938_B
P0000300001697