WIRING HARNESSES
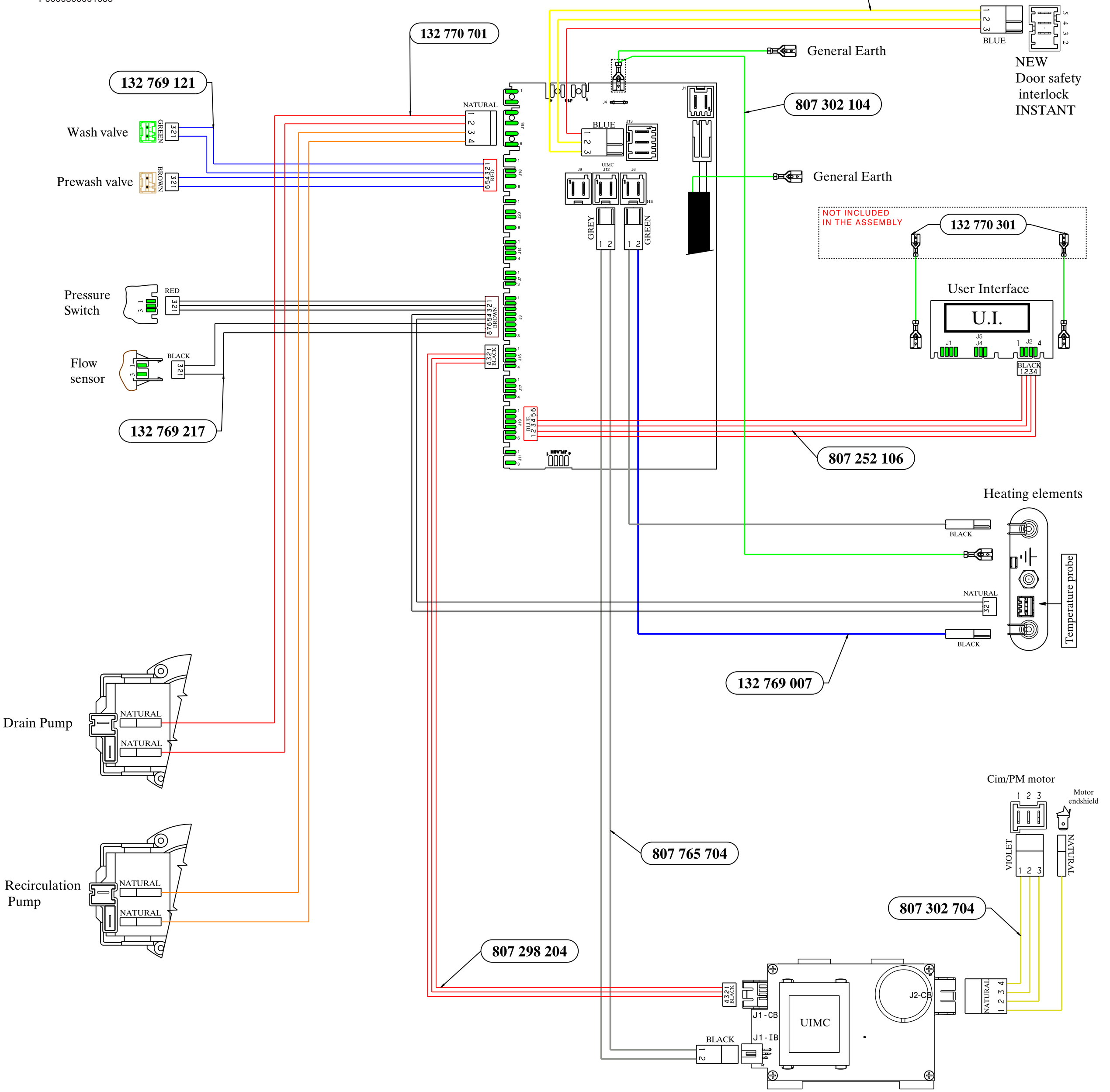
808636301_B
P0000300001635