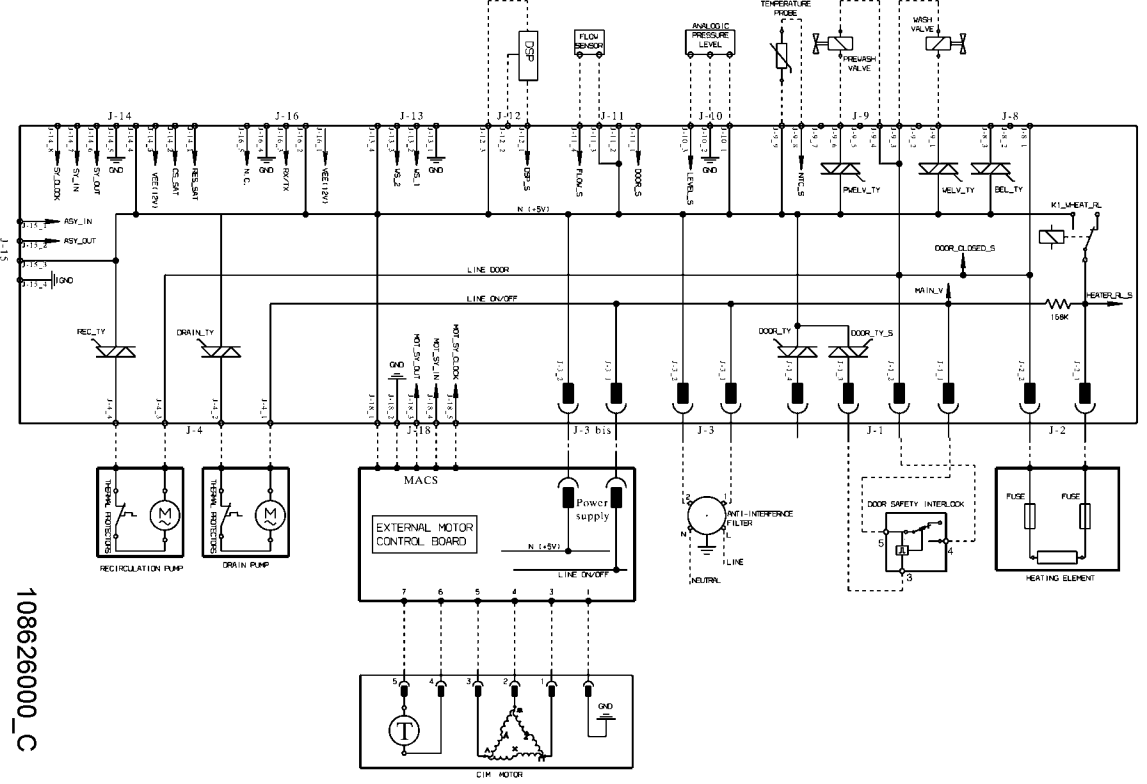
TEMPERATURE PROBE
FLOW SENSOR
ANALOGIC PRESSURE LEVEL
PREWASH VALVE
WASH VALVE
J-14
J-16
J-13
J-12
J-11
J-10
J-9
J-8
J-15
ASY_IN
ASY_OUT
GND
LINE DOOR
LINE ON/OFF
N (+5V)
DOOR_CLOSED_S
MAIN_V
HEATER_RL_S
K1_WHEAT_RL
168K
REC_TY
DRAIN_TY
DOOR_TY
DOOR_TY_S
J-4
J-18
J-3 bis
J-3
J-1
J-2
THERM PROTECTOR
RECIRCULATION PUMP
DRAIN PUMP
MACS
EXTERNAL MOTOR CONTROL BOARD
Power supply
ANTI-INTERFERENCE FILTER
LINE
NEUTRAL
DOOR SAFETY INTERLOCK
FUSE
HEATING ELEMENT
CIM MOTOR

108626000_C