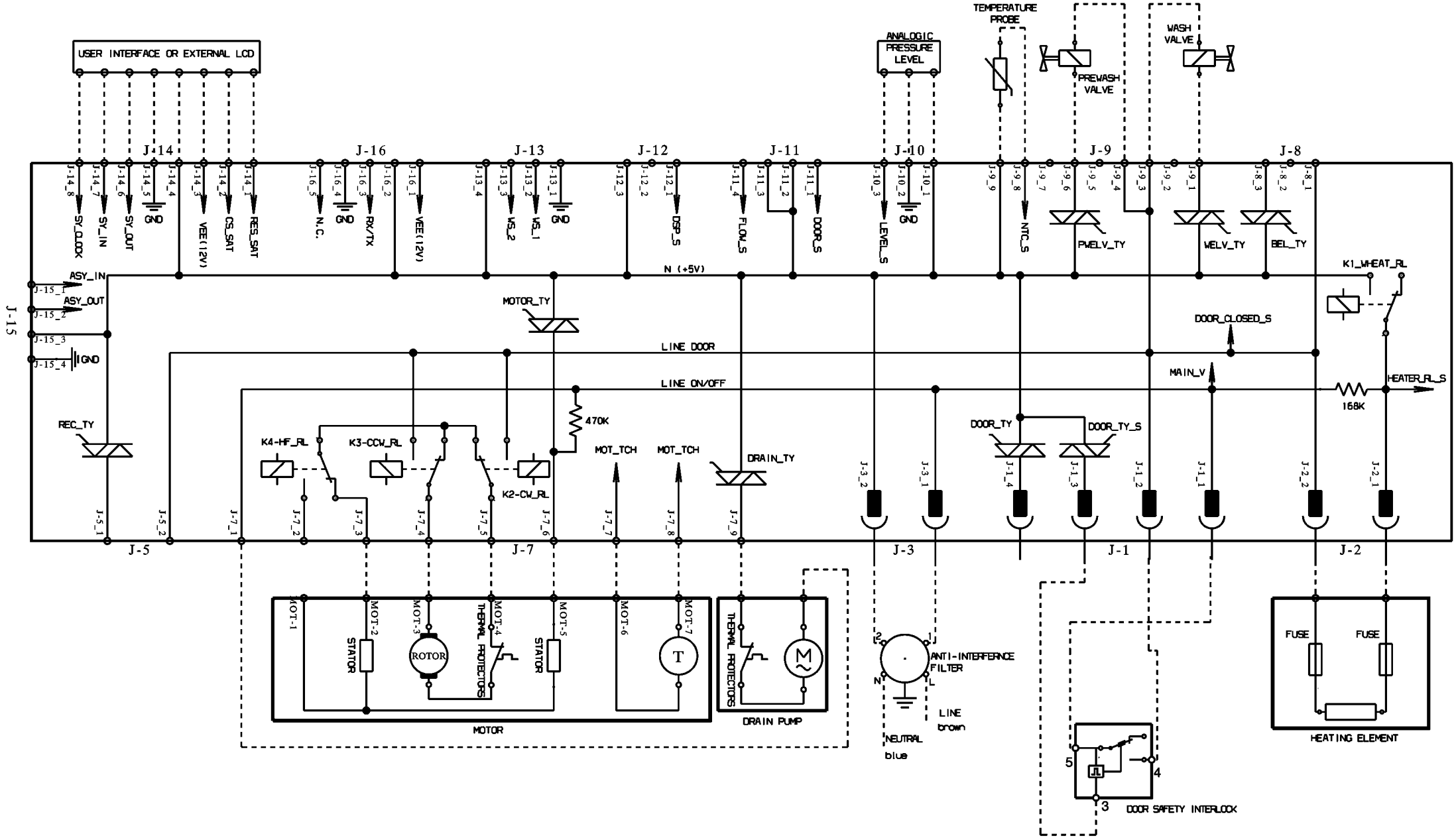

P0000300001276

192901900_EWM2100_C