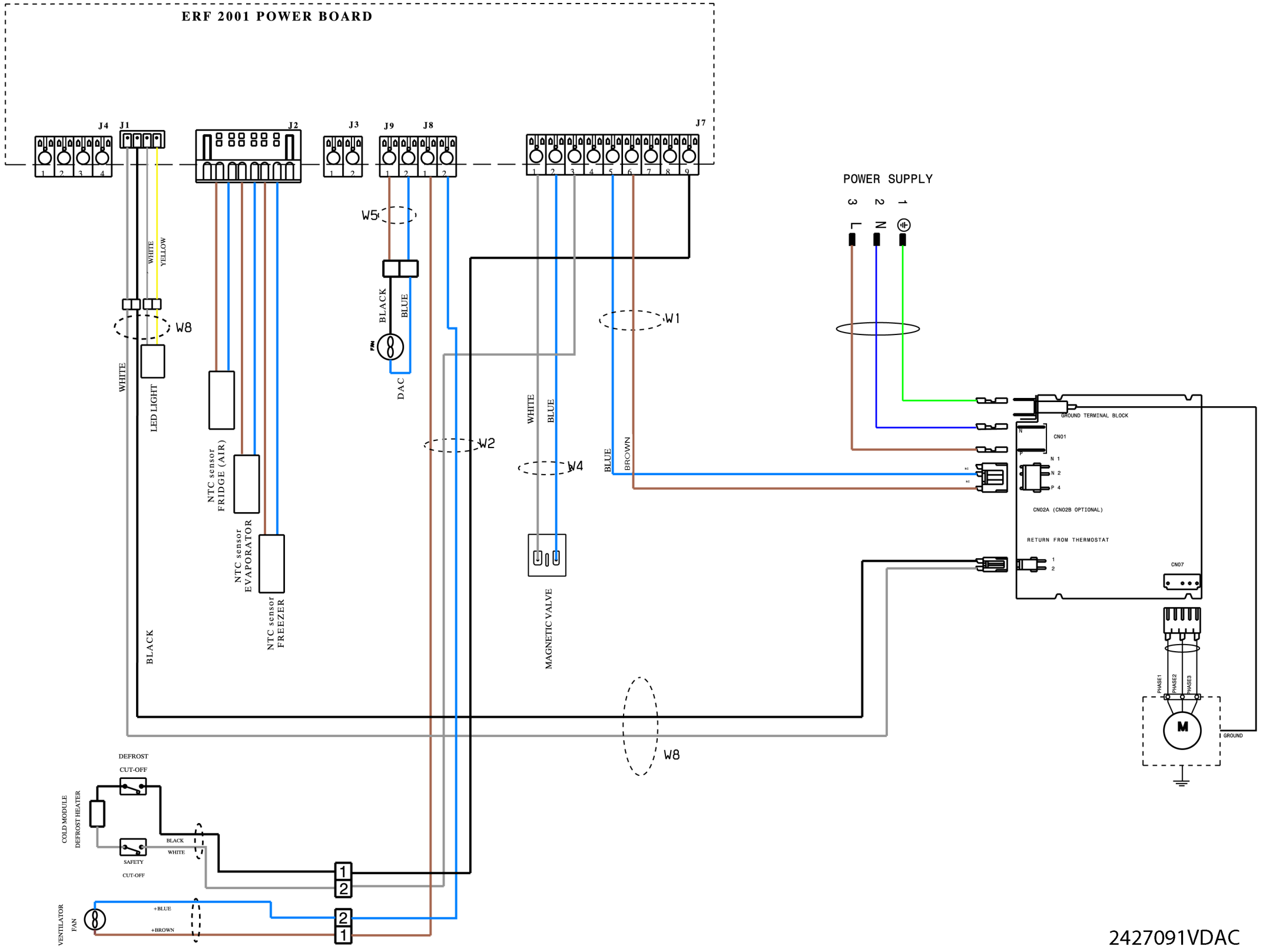
ERF 2001 POWER BOARD
J4
J1
J2
J3
J9
J8
J7
POWER SUPPLY
3 L
2 N
1
W5
W8
W1
W2
W4
W8
WHITE
YELLOW
WHITE
LED LIGHT
BLACK
BLUE
FAN
DAC
NTC sensor FRIDGE (AIR)
NTC sensor EVAPORATOR
NTC sensor FREEZER
WHITE
BLUE
MAGNETIC VALVE
BLUE
BROWN
GROUND TERMINAL BLOCK
CN01
N 1
N 2
P 4
CN02A (CN02B OPTIONAL)
RETURN FROM THERMOSTAT
CN07
PHASE1
PHASE2
PHASE3
M
GROUND
DEFROST
CUT-OFF
COLD MODULE
DEFROST HEATER
SAFETY
CUT-OFF
BLACK
WHITE
VENTILATOR
FAN
+BLUE
+BROWN
2427091VDAC