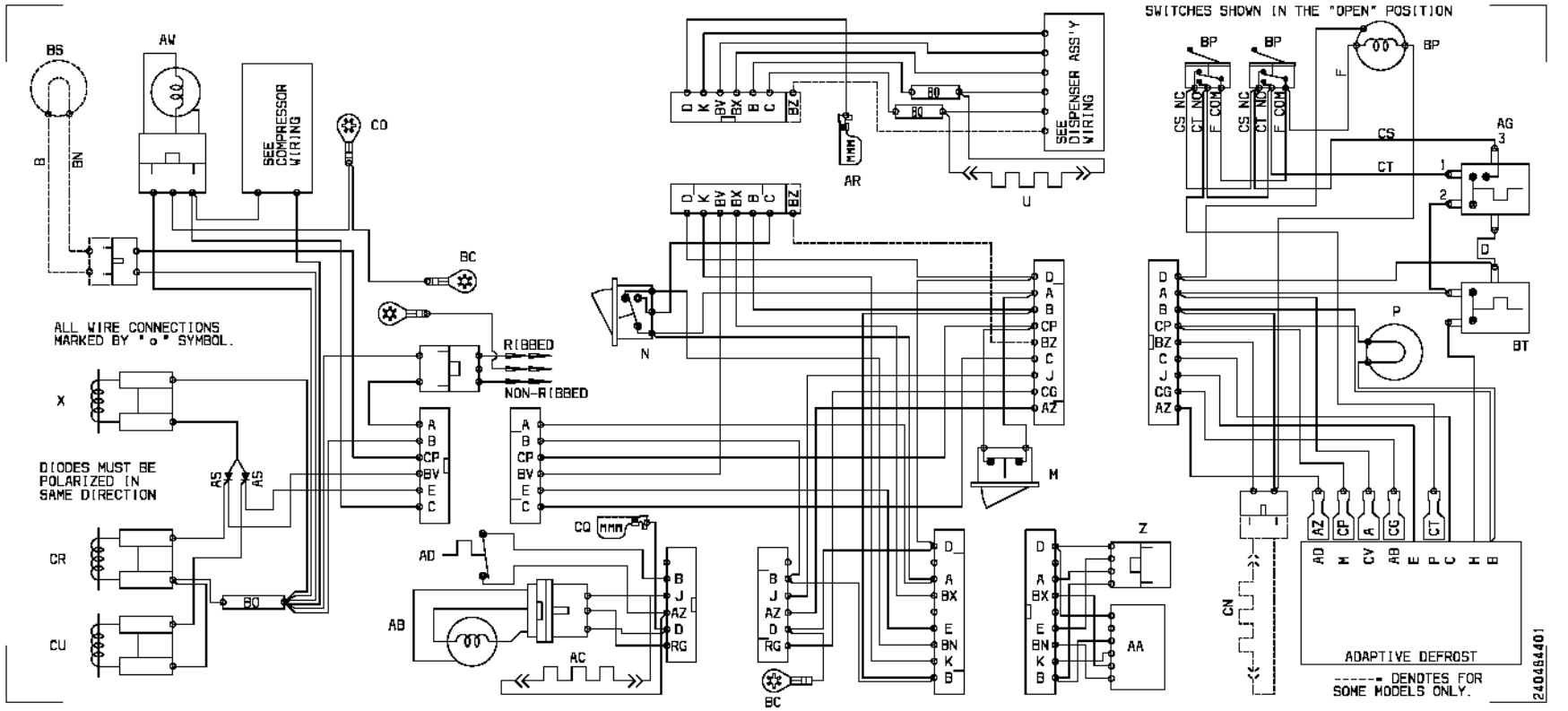
SWITCHES SHOWN IN THE "OPEN" POSITION
BS
AW
SEE COMPRESSOR WIRING
CO
BC
ALL WIRE CONNECTIONS MARKED BY "o" SYMBOL.
X
DIODES MUST BE POLARIZED IN SAME DIRECTION
AS
CR
CU
BQ
RIBBED
NON-RIBBED
AD
AB
AC
CQ
N
AR
SEE DISPENSER ASS'Y WIRING
U
M
Z
AA
BP
CS NC
CT NO
F COM
CS
CT
AG
BT
P
CN
ADAPTIVE DEFROST
----- DENOTES FOR SOME MODELS ONLY.
24048401