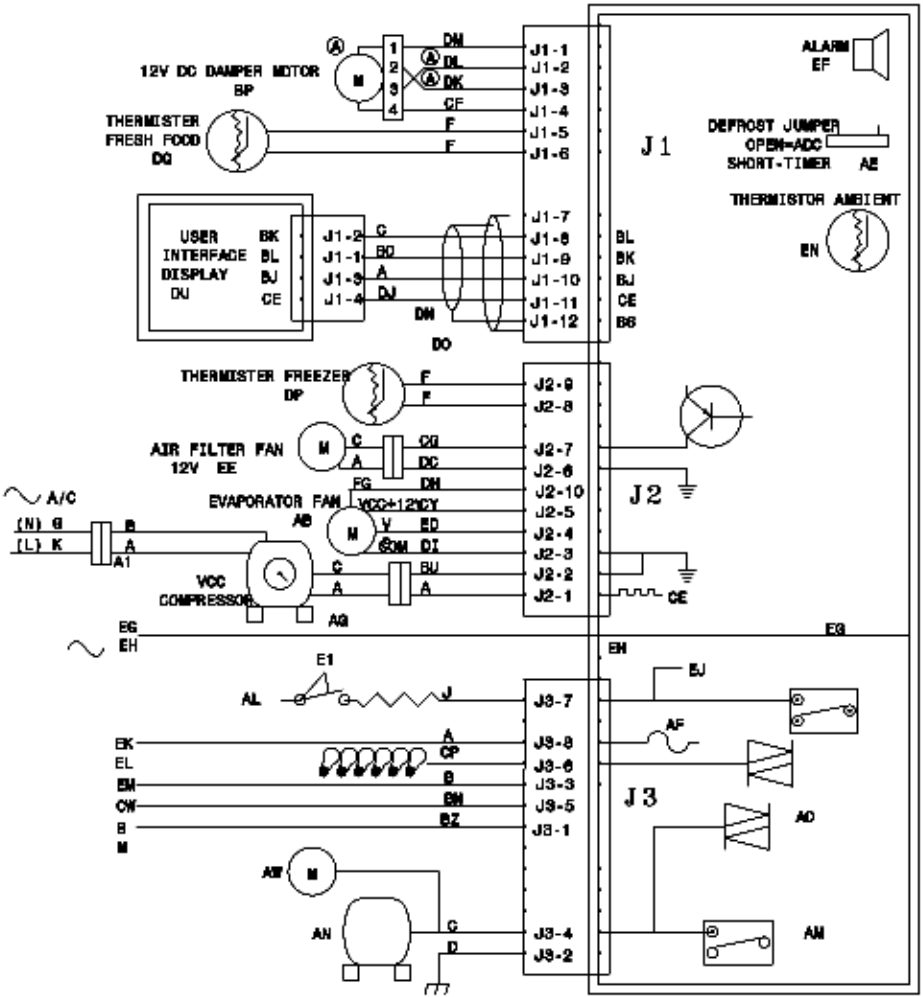
12V DC DAMPER MOTOR
BP
THERMISTER
FRESH FOOD
DQ
USER
INTERFACE
DISPLAY
DU
THERMISTER FREEZER
DP
AIR FILTER FAN
12V EE
EVAPORATOR FAN
AB
VCC
COMPRESSOR
AQ
A/C
(N) G
(L) K
A1
EG
EH
E1
AL
EK
EL
EM
CW
B
M
AW
AN
J1
J2
J3
ALARM
EF
DEFROST JUMPER
OPEN=ADC
SHORT-TIMER AE
THERMISTOR AMBIENT
EN
EJ
AF
AD
AM
CE
CV
CZ