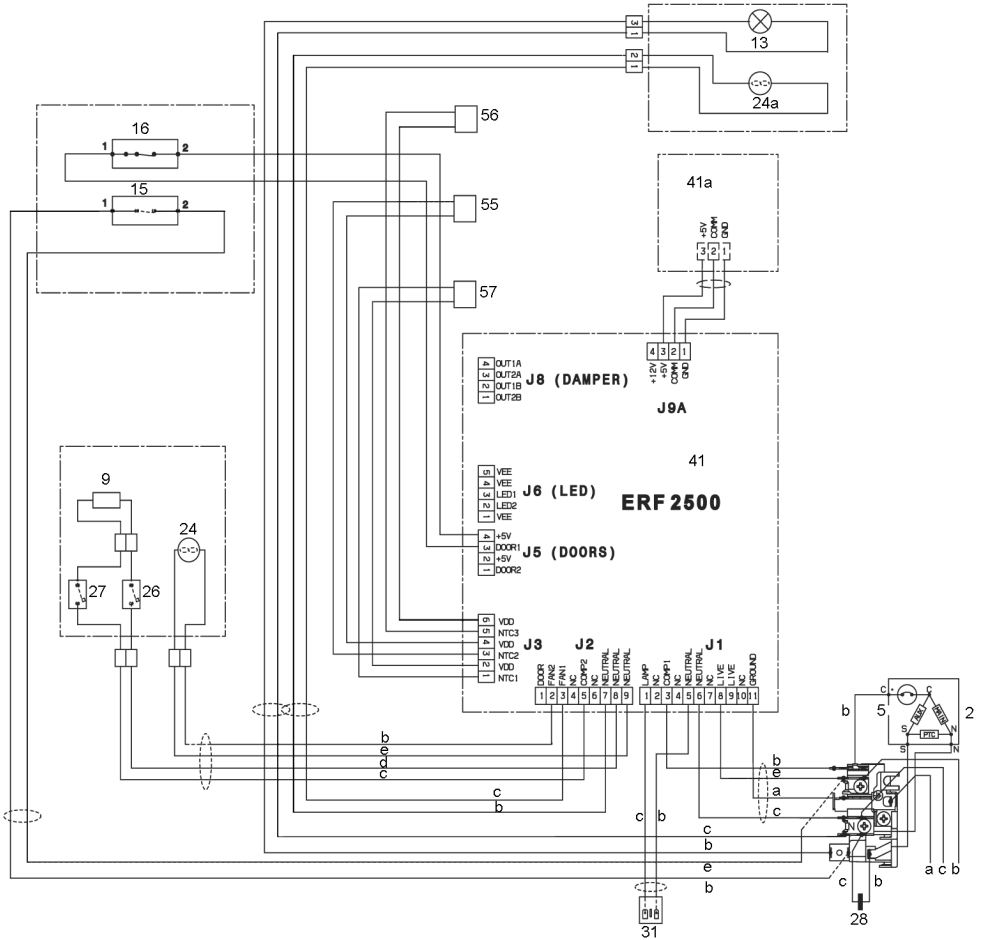

13
24a
16
15
56
55
57
41a
+5V
COMM
GND
+12V
+5V
COMM
GND
J9A
OUT1A
OUT2A
OUT1B
OUT2B
J8 (DAMPER)
41
VEE
VEE
LED1
LED2
VEE
J6 (LED)
ERF 2500
+5V
DOOR1
+5V
DOOR2
J5 (DOORS)
VDD
NTC3
VDD
NTC2
VDD
NTC1
J3
J2
J1
DOOR
FAN2
FAN1
NC
COMP2
NC
NEUTRAL
NEUTRAL
NEUTRAL
LAMP
NC
COMP1
NC
NEUTRAL
NEUTRAL
NC
LIVE
LIVE
NC
GROUND
9
24
27
26
5
2
PTC
28
31

2261493CV