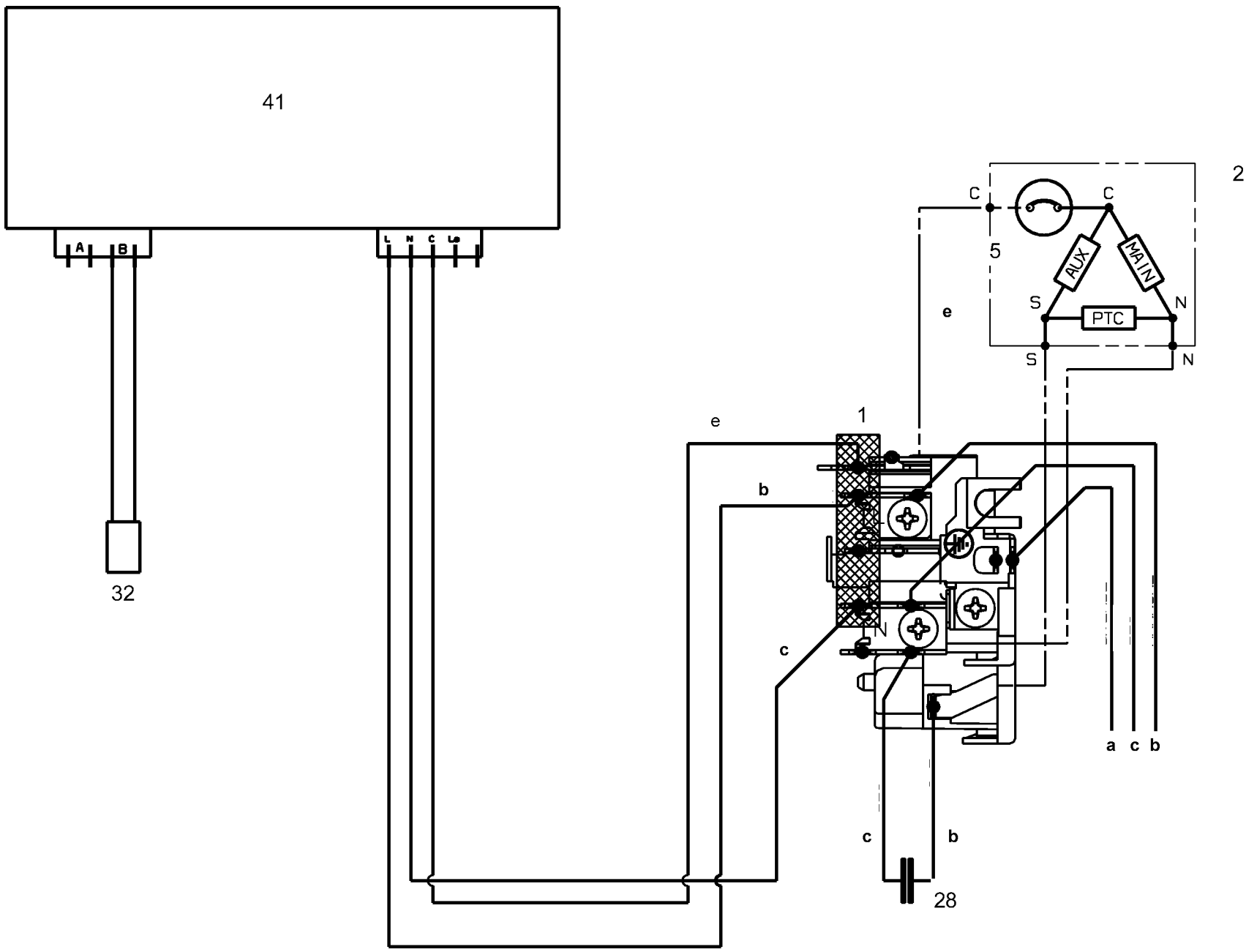
41
A
B
L
N
C
Lo
32
2
C
C
5
AUX
MAIN
S
N
PTC
S
N
e
e
1
b
c
a
c
b
c
b
28

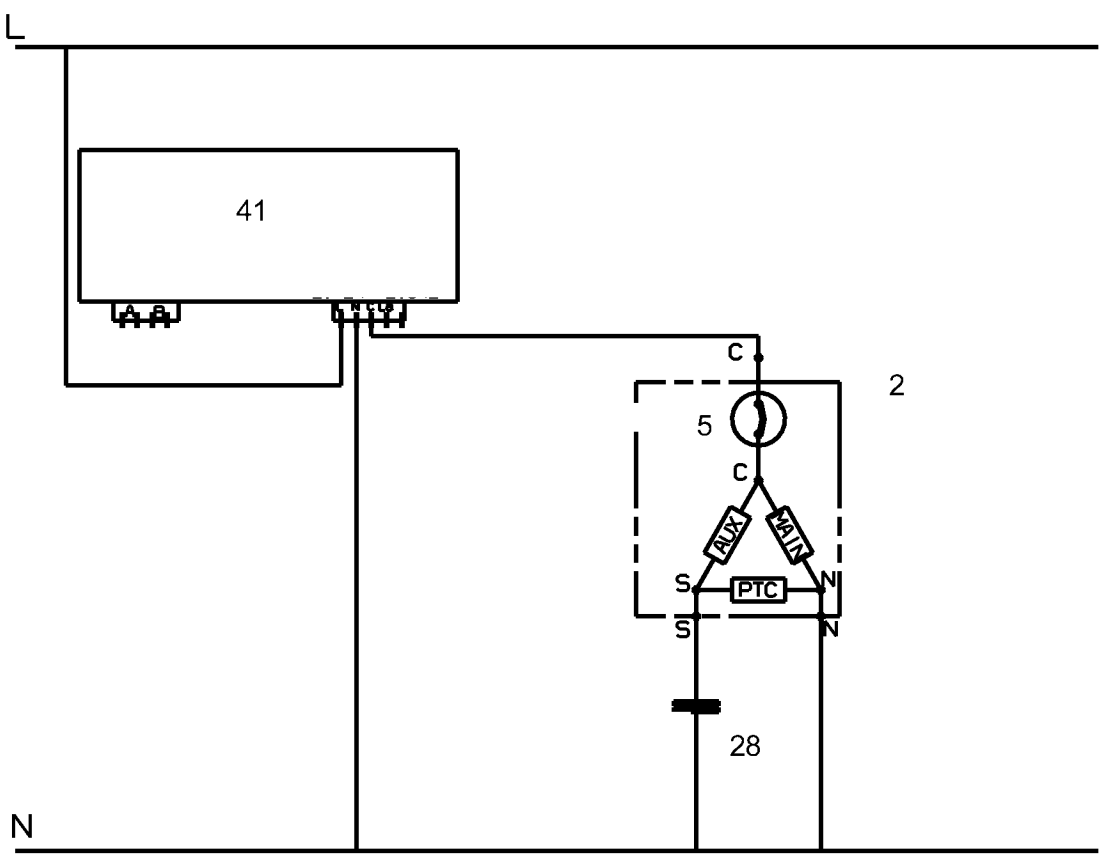
L
41
A
B
C
2
5
C
AUX
MAIN
S
N
PTC
S
N
28
N

2261688c