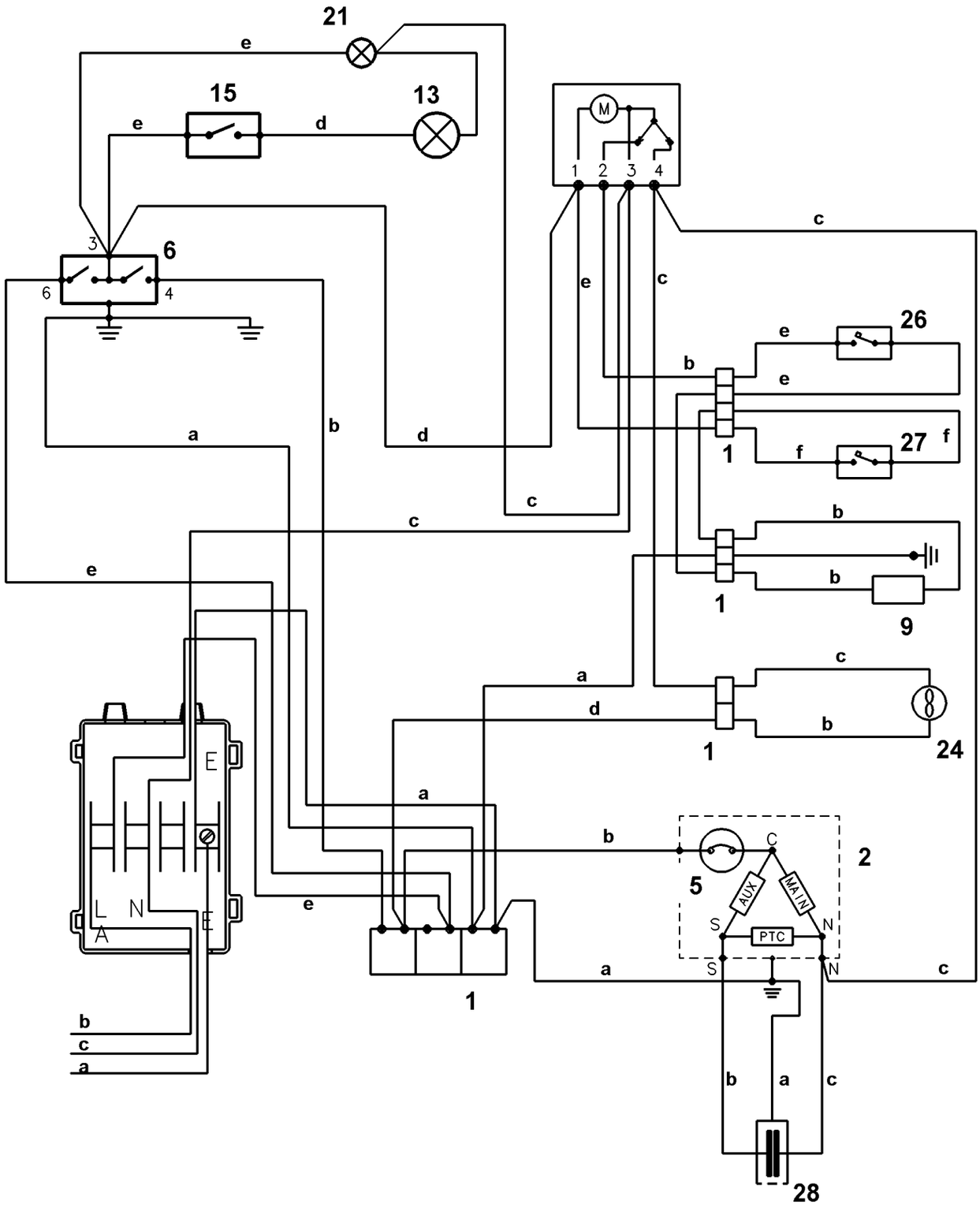
21
15
13
6
26
27
1
9
24
2
5
28
M
AUX
MAIN
PTC
L N E
A

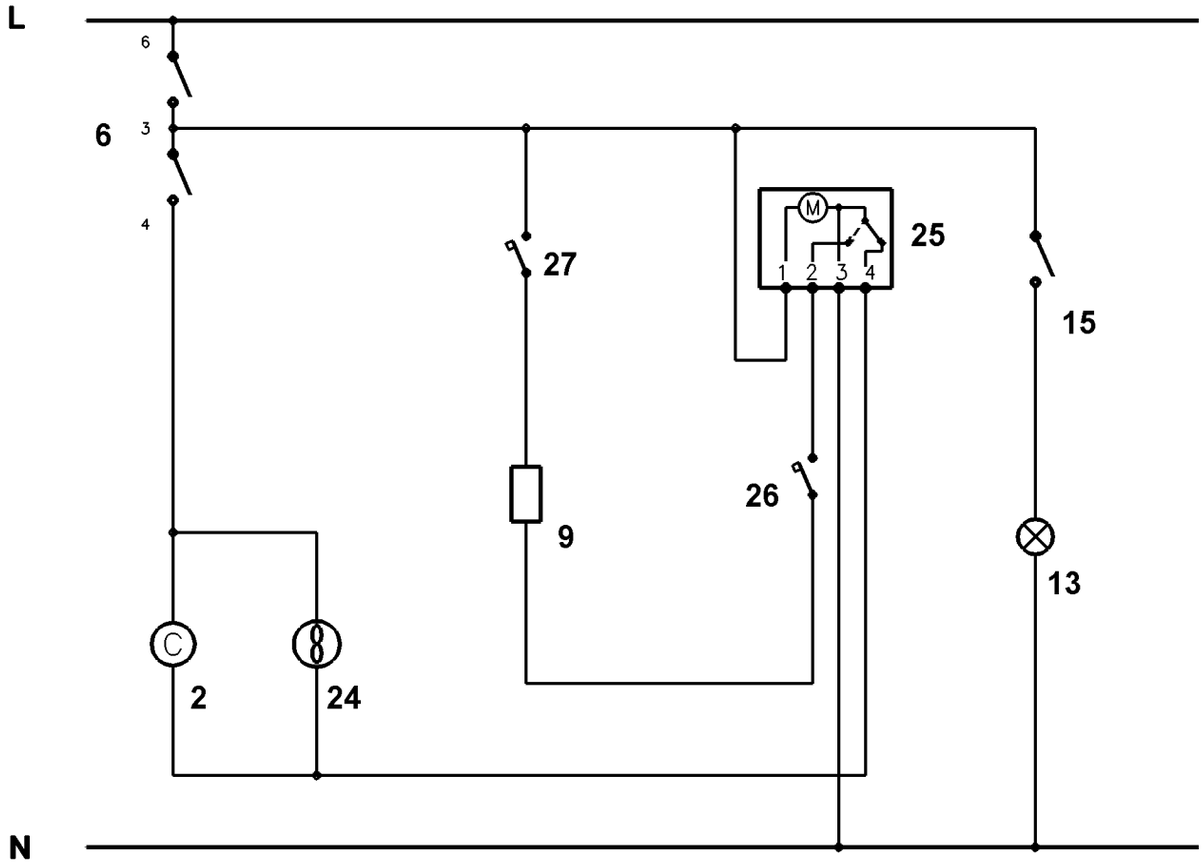
L
N
6
27
25
15
26
9
13
2
24
M

226 1269cv