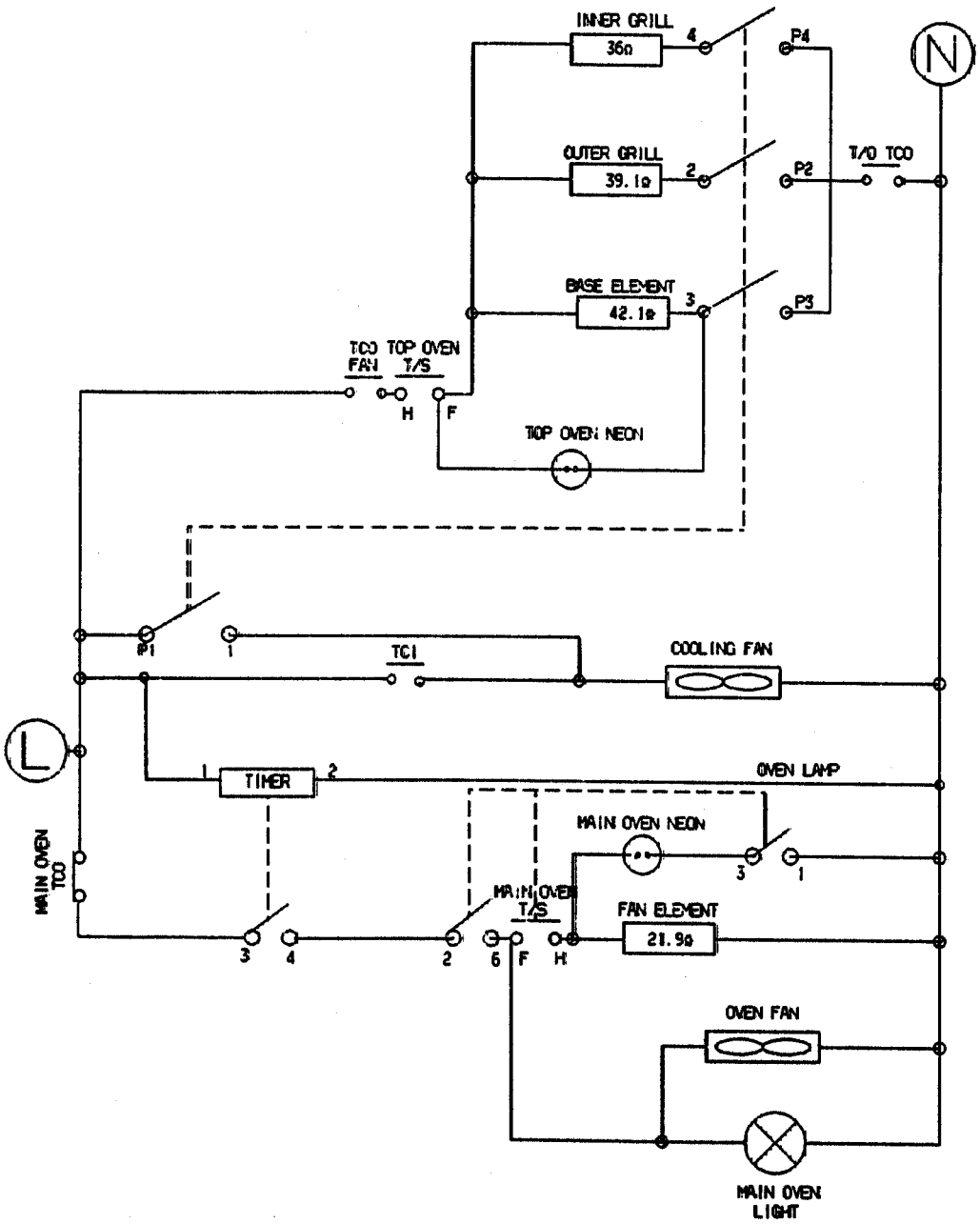SCHEMATIC DIAGRAM - EPDOM/TBD903 - UP TO SERIAL NO.117