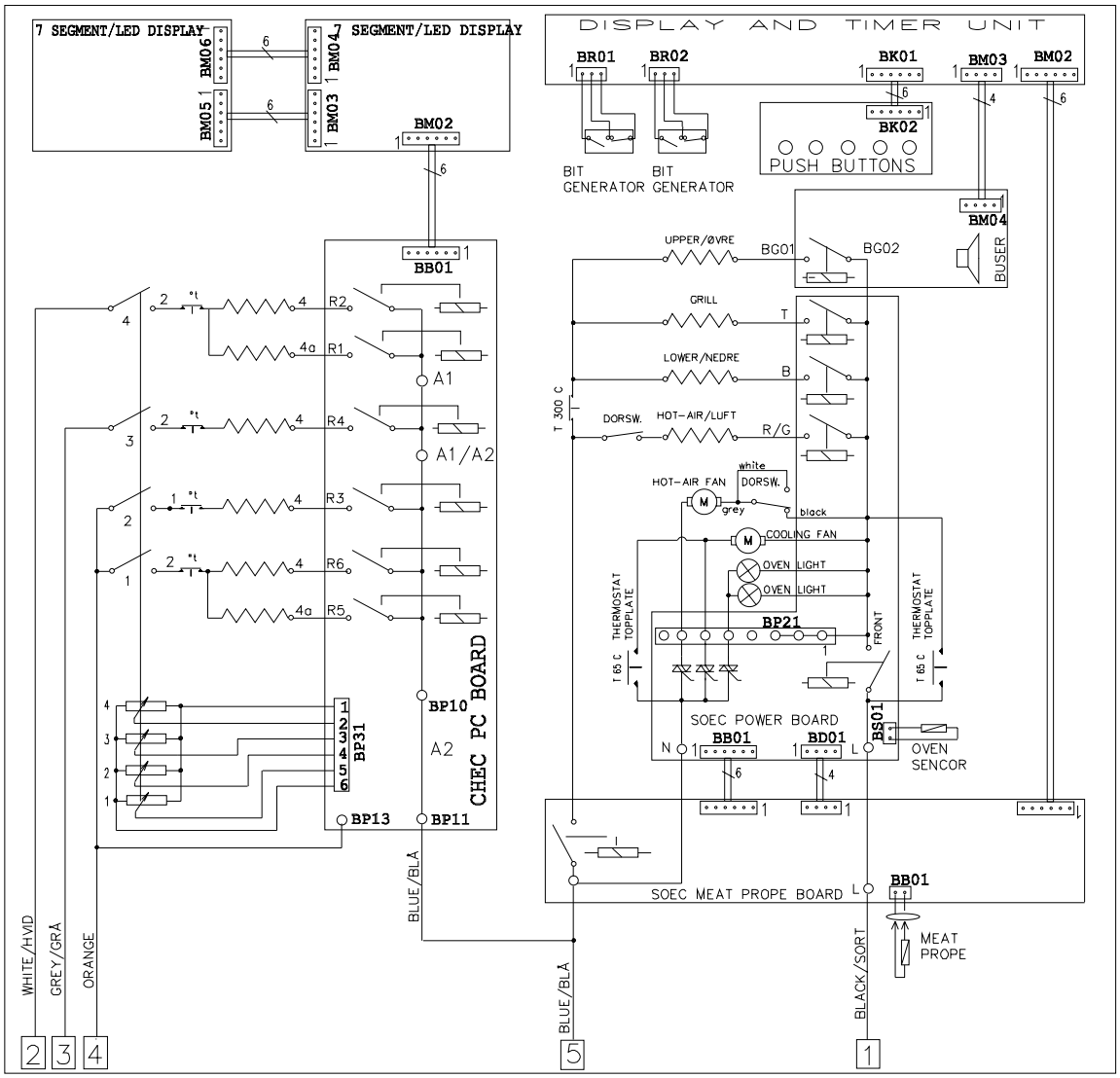

TYPE: CSM 400			
MODEL	PRODUCT NO.	TOP	CONNECTION CABLE
ELK 2001-0T	948201038	905398	-
ELK 2001-1	948201037	905398	-