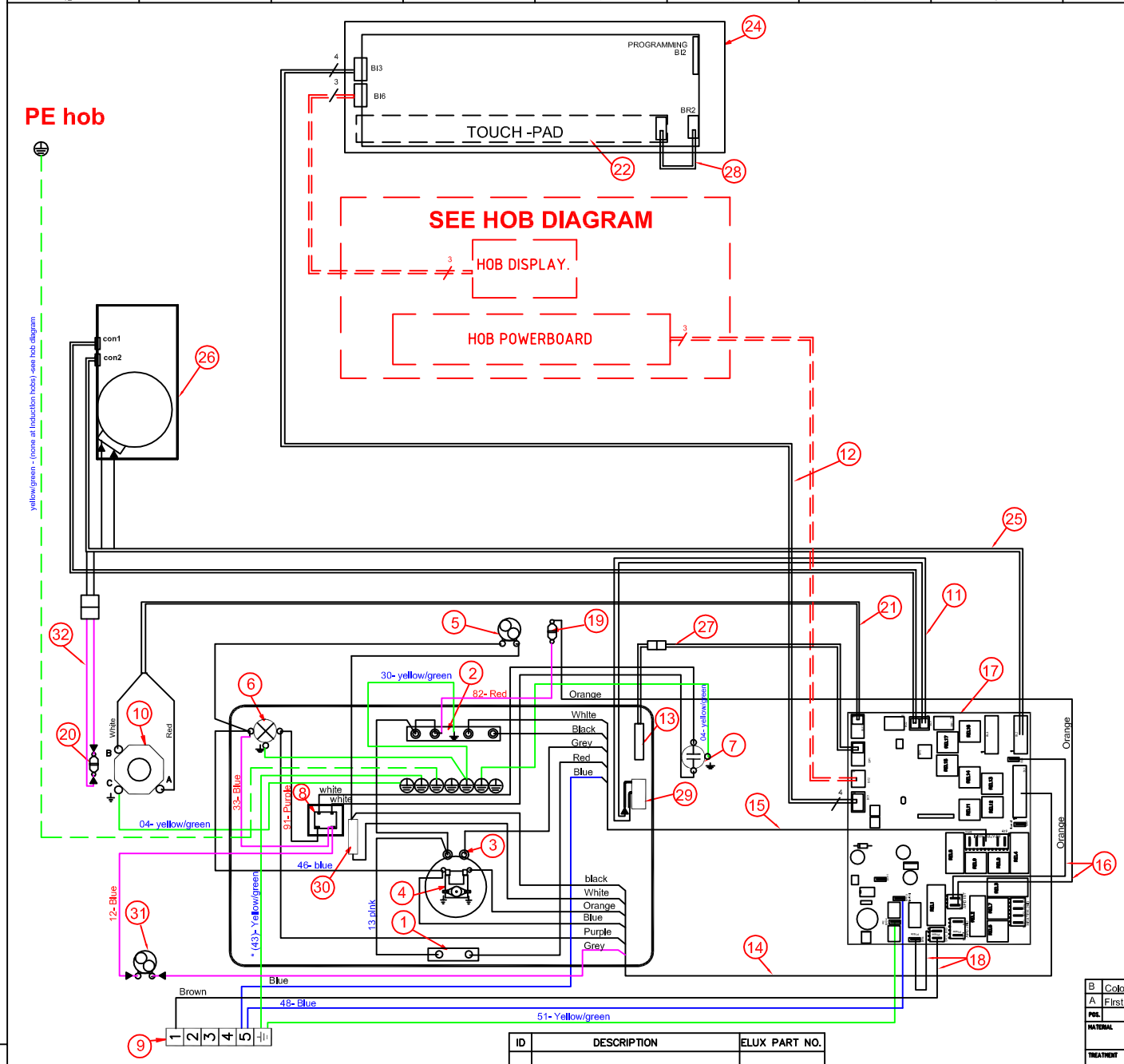

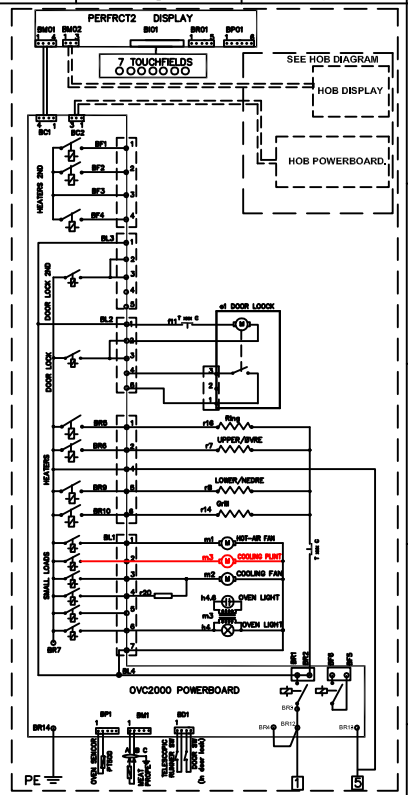

Pos	No	Components
32	1	Wireset Heat protector, Door-lock
31	1	Cooling fan, plinth
30	1	Resistor for cooling fan 680R 17W
29	1	microswitch for telescopic runner
28	1	Ribbon cable PF2
27	1	Wireset for oven sensor
26	1	Door-lock pyro
25	1	Wireset door-lock
24	1	Display PF2
22	1	TOUCH PAD PF2
21	1	Wire set meat probe
20	1	Heat protector Door-lock
19	1	Heat protector
18	1	Wireset 1.mains in
17	1	OVC 2000 power board
16	1	Wire set APD
15	1	Wire set heater
14	1	Wire set small loads
13	1	Oven PT500 sensor
12	1	Wire set MACS OVC 2000 - display 4 pin
11	1	Wireset door-lock signal
10	1	Jack socket meat probe
9	1	Main terminal
8	1	Transformator for sidelamp 230/12V
7	1	Oven lamp back side
6	1	Oven lamp side 12V Halogen
5	1	Cooling fan
4	1	Fan motor hot air
3	1	Heating element, hot air 230V 1550W
2	1	Heating element top 230V 1000/1900W
1	1	Heating element lower 230V 1000W

ID	DESCRIPTION	ELUX PART NO.
*		
	Component list	330 2222
▶	INSULATION HOUSING	

POS.	MODIFICATIONS	SIGNATURE	REQUEST	DATE
B	Colour change on pos 16 to orange	S.Ahl	ABS 5426	2007-06-07
A	First edition	S.Ahl	ABS 5367	2007-05-12

MATERIAL
TREATMENT
WEIGHT
DESIGN OWNER
DRN hh
DATE 2005-11-17
CHD S.Ahl
APPR S.Ahl
2D ONLY X
CONCEPT 3D
EXACT 3D
MODEL
DESIGN USERS
SCALE
REPLACES
DERIVED FROM
SUPPLY SPECIFICATIONS
EUROPEAN METHOD
TITLE M2 pyro oven

Electrolux

NUMBER 349 7280 02
REV B
SHEET

PF2,SIR,PYRO

VARIANT NUMBER	REPLACED NUMBER	POS.	MODEL	DESIGN USERS	CHANGES FROM THE BASE NUMBER

GENERAL TOLERANCES
ANGLES
LENGTHS AND DIAMETERS

A2 [DF03]

This drawing contains confidential information and is the property of Electrolux, without whose permission it may not be copied, shown or handed to a third party or otherwise used and it is to be returned promptly upon request to the design owner, who is responsible for the drawing.

Items shown in this drawing must not contain substances that are banned according to Directive, 2002/95/EC, the RoHS Directive (Lead, Cadmium, Mercury, hexavalent Chromium, PBB and PBDE), or substances classified as "Banned" or "Restricted" according to the Electrolux Restricted Materials List.