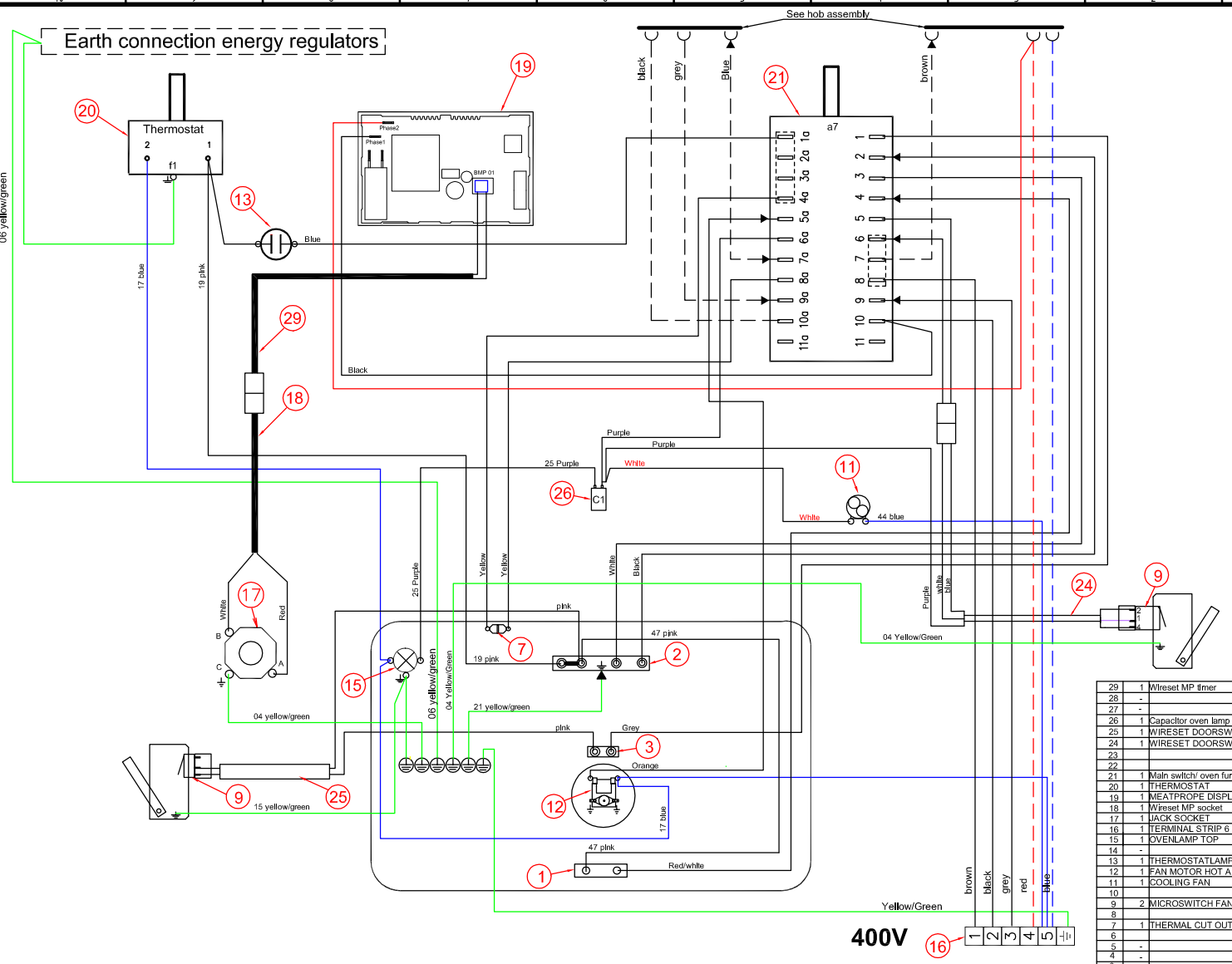

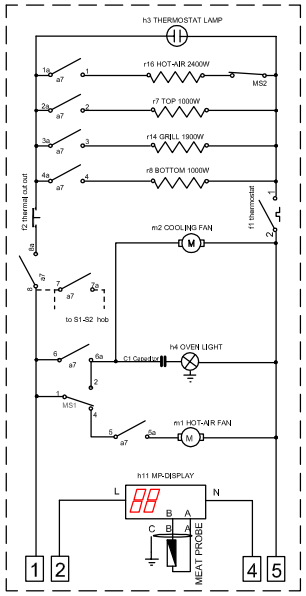

ID	Description	Elux part No.
18	Wiring meat proab socket	349 5894-01
21	Wiring oven harness	349 4179-04
24	Wiring door switch	349 5849-01
25	Wiring door switch	349 4194-01
29	Wiring meat proab timer	349 5895-01
	List of crimp contacts	330 1766
	Component list	330 2222
▶	Insulation house	330 4175

POS	No	Note
29	1	Wireset MP timer
28	-	
27	-	
26	1	Capacitor oven lamp 40W
25	1	WIRESET DOORSWITCH hot air element
24	1	WIRESET DOORSWITCH LIGHT
23		
22		
21	1	Main switch/ oven function
20	1	THERMOSTAT
19	1	MEATPROPE DISPLAY
18	1	Wireset MP socket
17	1	JACK SOCKET
16	1	TERMINAL STRIP 6 POLS,SNAP
15	1	OVENLAMP TOP
14	-	
13	1	THERMOSTATLAMP
12	1	FAN MOTOR HOT AIR OVEN
11	1	COOLING FAN
10		
9	2	MICROSWITCH FAN/LIGHT
8		
7	1	THERMAL CUT OUT
6		
5	-	
4	-	
3	1	HEATINGELE. HOTAIR 2400W
2	1	HEATINGELE. TOP 1000/1900W
1	1	HEATINGELE. LOWER 1000W

POS.	MODIFICATIONS	SIGNATURE	REQUEST	DATE
A	First edition	S.Ahl	ABS 6263	2007-12-05

MATERIAL
TREATMENT
WEIGHT
DESIGN OWNER -
DRN S.Ahl
CHD S.Ahl
APPR S.Ahl
DATE 2007-12-05
TO ONLY
CONCEPT 30
EXACT 30
MODEL
DESIGN USERS
SCALE
REPLACES
DERIVED FROM
SUPPLY SPECIFICATIONS
EUROPEAN METHOD
TITLE Wiring oven assembly

Electrolux

NUMBER 349 5850
REV A
SHEET

VARIANT NUMBER	REPLACED NUMBER	POS.	MODEL	DESIGN USERS	CHANGES FROM THE BASE NUMBER
349 5850-02			400V	-	

GENERAL TOLERANCES
ANGLES
LENGTHS AND DIAMETERS

A2 [DF03]

This drawing contains confidential information and is the property of Electrolux, without whose permission it may not be copied, shown or handed to a third party or otherwise used and it is to be returned promptly upon request to the design owner, who is responsible for the drawing.

Items shown in this drawing must not contain substances that are banned according to Directive, 2002/95/EC, the RoHS Directive (Lead, Cadmium, Mercury, hexavalent Chromium, PBB and PBDE), or substances classified as "Banned" or "Restricted" according to the Electrolux Restricted Materials List.