This drawing contains confidential information and is the property of Electrolux, without whose permission it may not be copied, shown or handed to a third party or otherwise used. Copies of this drawing are available upon request to the design owner, who is responsible for the drawing.

Items shown in this drawing must not contain substances that are banned according to Directive, 2002/95/EC, the RoHS Directive (Lead, Cadmium, Mercury, hexavalent Chromium, PCB and PBDE), or substances classified as "Banned Substances" or "Restricted" according to the Electrolux Restricted Materials list.

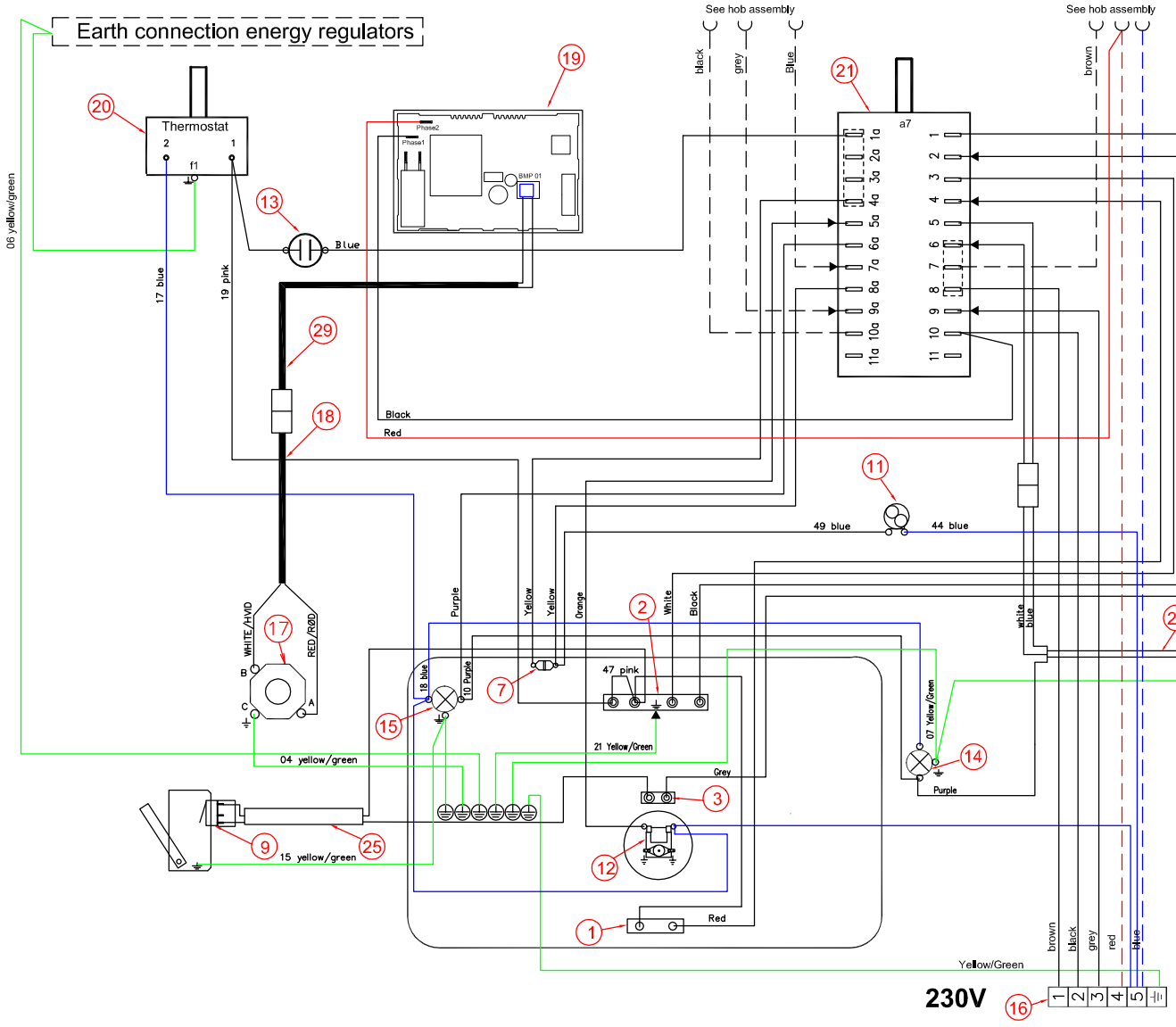

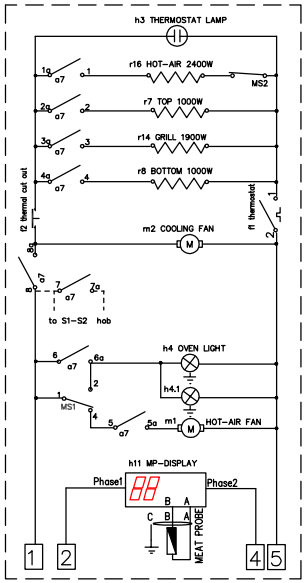

POS	ANT	GENSTAND
29	1	Wireswt MP timer
28	-	
27	-	
26	-	
25	1	WIRESET DOORSWITCH hot air element
24	1	WIRESET DOORSWITCH
23		
22		
21	1	Main switch/ oven function
20	1	THERMOSTAT
19	1	MEATPROPE DISPLAY
18	1	Wireset MP socket
17	1	JACK SOCKET
16	1	TERMINAL STRIP 6 POLS, SNAP
15	1	OVENLAMP TOP
14	1	OVEN LAMP SIDE
13	1	THERMOSTAT LAMP
12	1	FANMOTOR HOTAIROVEN
11	1	COOLING FAN
10	-	
9	2	MICROSWITCH FAN/LIGHT
8	-	
7	1	THERMAL CUT OUT
6	-	
5		
4	-	
3	1	HEATINGELE. HOTAIR 2400W
2	1	HEATINGELE. TOP 1000/1900W
1	1	HEATINGELE. LOWER 1000W

ID	DESCRIPTION	ELUX PART NO.
	Wiring list	349 4548
	Oven selector wiring	349 4276
▶	INSULATION HOUSING	
	LIST OF CRIMP CONTACTS	330 1766
	Component list	330 2222

VARIANT NUMBER	REPLACED NUMBER	POS.	MODEL	DESIGN USERS	CHANGES FROM THE BASE NUMBER
349 5652-02				-	

POS.	MODIFICATIONS	SIGNATURE	REQUEST	DATE
A	First edition	S.Ahl	ABS5439	2007-06-13

MATERIAL
TREATMENT
WEIGHT
MODEL
SCALE
EUROPEAN METHOD
DESIGN USERS
REPLACES
DERIVED FROM
SUPPLY SPECIFICATIONS
DESIGN OWNER -
DRN S.Ahl
DATE 2007-06-13
CHD S.Ahl
APPR S.Ahl
TO ONLY
CONTRA ±0
EXACT ±0
TITLE Wiring oven assembly
Electrolux
NUMBER 349 5652
REV A
SHEET

GENERAL TOLERANCES
ANGLES
LENGTHS AND DIAMETERS
A2 IDF03I