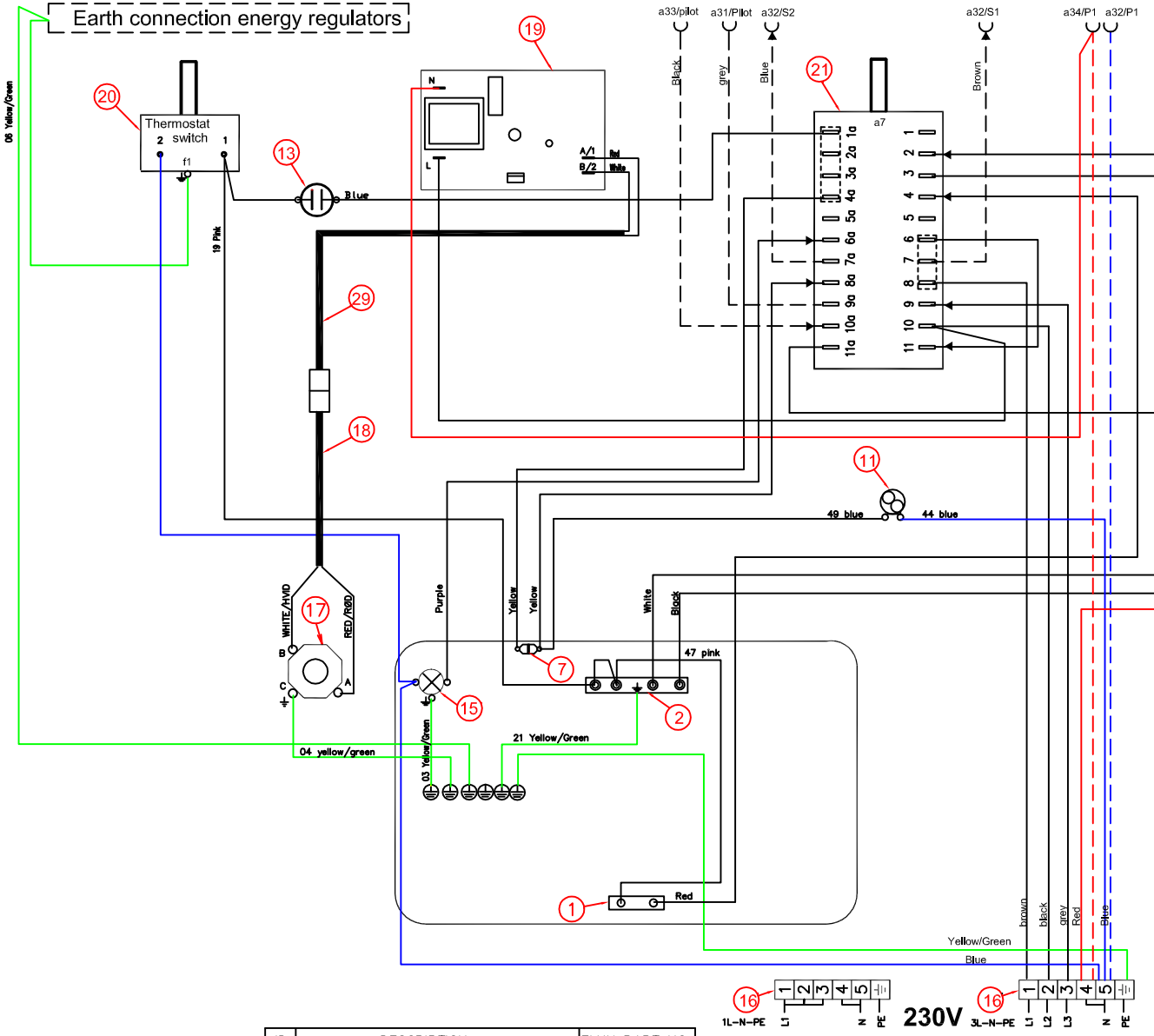

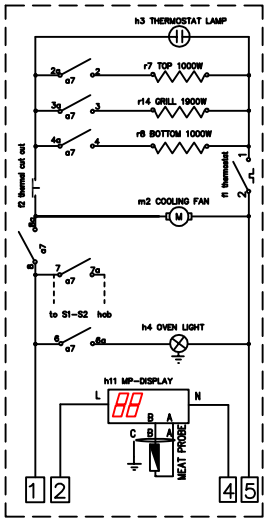

ID	DESCRIPTION	ELUX PART NO.
	Oven selector wiring	349 5006-04
▶	INSULATION HOUSING	
	LIST OF CRIMP CONTACTS	330 1766
	Component list	330 2222

POS	ANT	GENSTAND
29	1	Wireset MP timer
28	-	
27	-	
26	-	
25	-	
24	-	
23		
22		
21	1	Main switch/ oven function
20	1	THERMOSTAT
19	1	HEATPROPE DISPLAY
18	1	Wireset MP socket
17	1	JACK SOCKET
16	1	TERMINAL STRIP 6 POLS,SNAP
15	1	OVENLAMP TOP
14		
13	1	CONTROL LAMP
12	-	
11	1	COOLING FAN
10	-	
9	-	
8	-	
7	1	THERMAL CUT OUT
6	-	
5	-	
4	-	
3	-	
2	1	HEATINGELE. TOP 1000/1900W
1	1	HEATINGELE. LOWER 1000W

POS.	MODIFICATIONS	SIGNATURE	REQUEST	DATE
B	New wire, X1-a34-f11	IAN	ABS 1952	2005.11.18
A	New drawing created	S.Ahl	ABS 1447	2005.10.07

MATERIAL
TREATMENT
WEIGHT
DESIGN OWNER -
DRN S.Ahl
DATE 2005-10-07
CHD
APPR
PD ONLY
CONCEPT 30
EXACT 30
MODEL
DESIGN USERS
SCALE
REPLACES
DERIVED FROM
SUPPLY SPECIFICATIONS
EUROPEAN METHOD
TITLE Wiring oven assembly
NUMBER 349 5007
REV B
SHEET

Electrolux

VARIANT NUMBER	REPLACED NUMBER	POS.	MODEL	DESIGN USERS	CHANGES FROM THE BASE NUMBER
349 500X-02				-	

GENERAL TOLERANCES
ANGLES
LENGTHS AND DIAMETERS

A2 IDF031

This drawing contains confidential information and is the property of Electrolux, without whose permission it may not be copied, shown or handed to a third party or otherwise used and it is to be returned promptly upon request to the design owner, who is responsible for the drawing.

Items shown in this drawing must not contain substances that are banned according to Directive, 2002/95/EC, the RoHS Directive (Lead, Cadmium, Mercury, hexavalent Chromium, PBB and PBDE), or substances classified as "Banned" or "Restricted" according to the Electrolux Restricted Materials List.