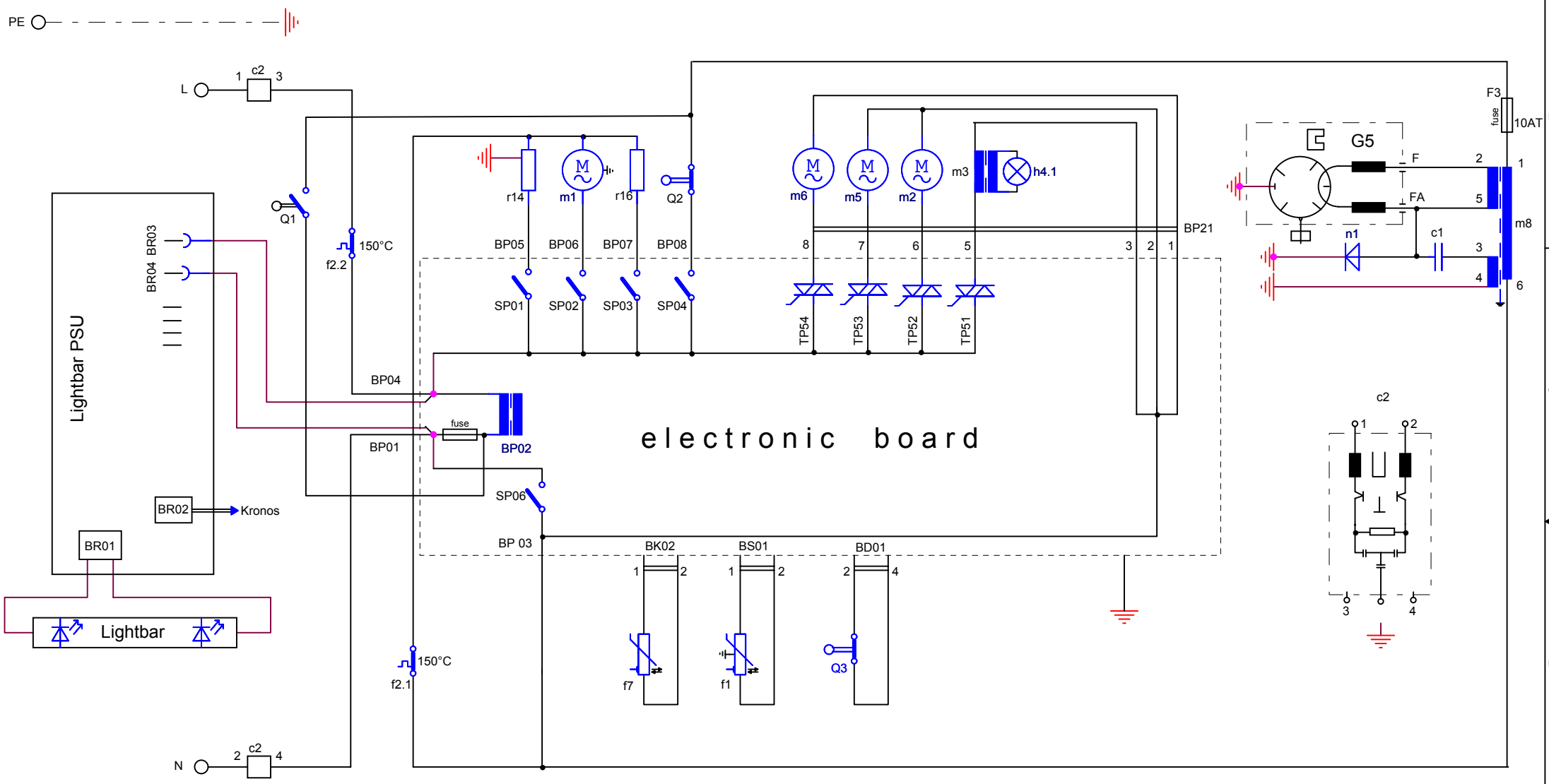

Q1 = opener left
Q2 = closer left
Q3 = closer right
m1 = fan hot air
m2 = fan cooling
m3 = transformer halogen lamp
m5 = fan cooling magnetron
m6 = motor stirrer
m8 = transformer high voltage

r14 = grill
r16 = rear
f1 = oven thermostat
f2 = safety temp. limiter oven
f7 = sensor to magnetron
h4.1 = lamp halogen
G5 = magnetron
c2 = interference filter

Q1,Q2,Q3: switch position when door closed

POS	ZUST	MODIFICATIONS	SIGNATURE	REQUEST	DATE
1	A	First Edition	S.Grazioli		08.03.06

MATERIAL: Leitungsmaterial in Silikon Temp. best. min 180°C
Insulation of the cord is silicon, temperature-resistance: min 180°C

TREATMENT | WEIGHT

DESIGN OWNER: SC | DRN: S.Grazioli | CHD | APPR | DATE: 08.03.06

MODEL | DESIGN USERS: SC | SCALE | EUROPEAN METHOD | REPLACES NO | DERIVED FROM NO: 315 5660 00 | SUPPLY SPECIFICATIONS NO

TITLE: Schaltplan MWO II

schematic MWO II

Electrolux

NUMBER: 315 5660 26 | SHEET: 01(01) | REV: A