Static combi with No frost, Slot in

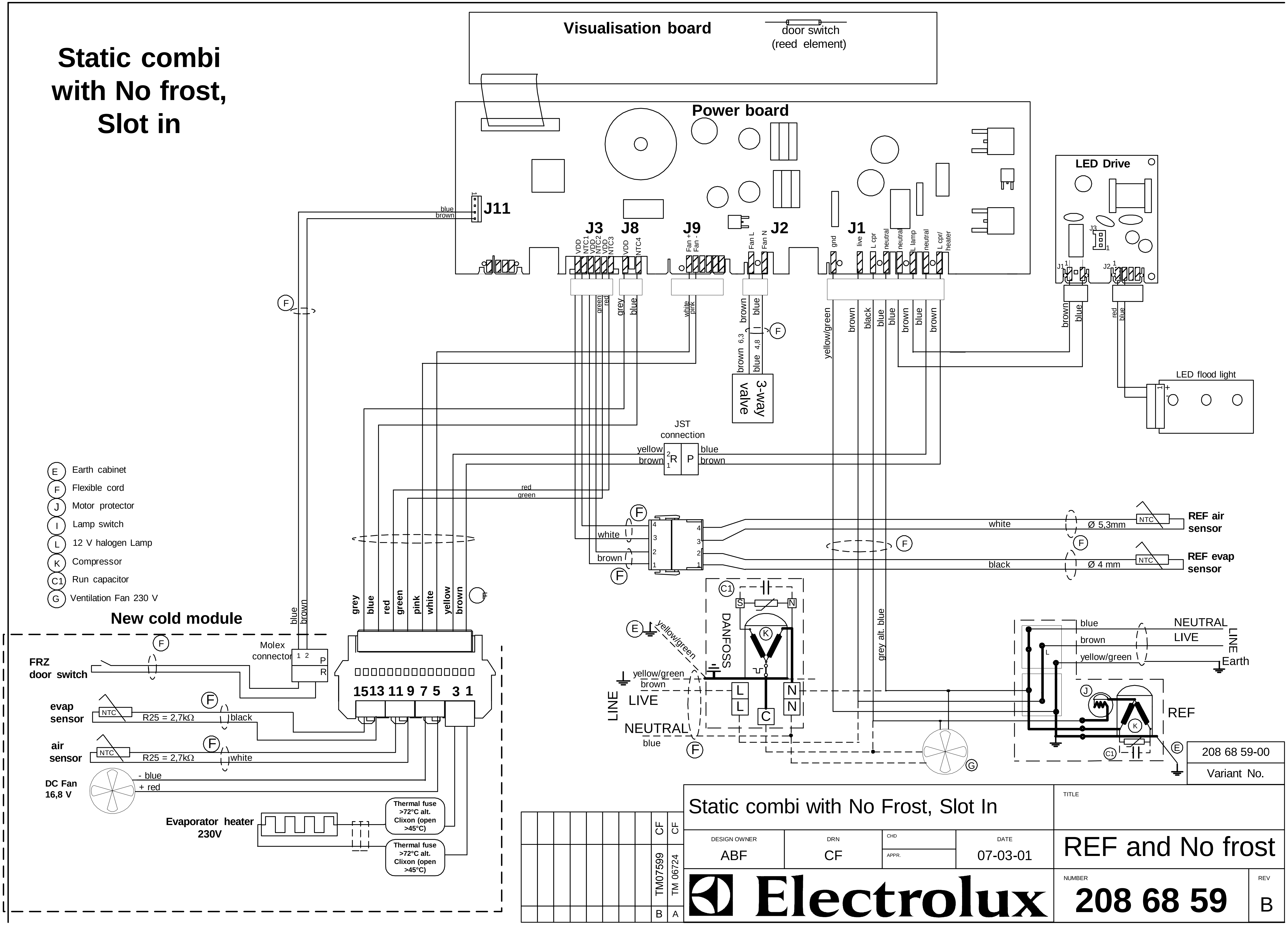

208 68 59-00	Variant No.

Static combi with No Frost, Slot In

DESIGN OWNER	DRN	CHD	DATE
ABF	CF	APPR.	07-03-01

TITLE: REF and No frost

NUMBER: 208 68 59 — REV: B

CF	CF
TM07599	TM 06724
B	A