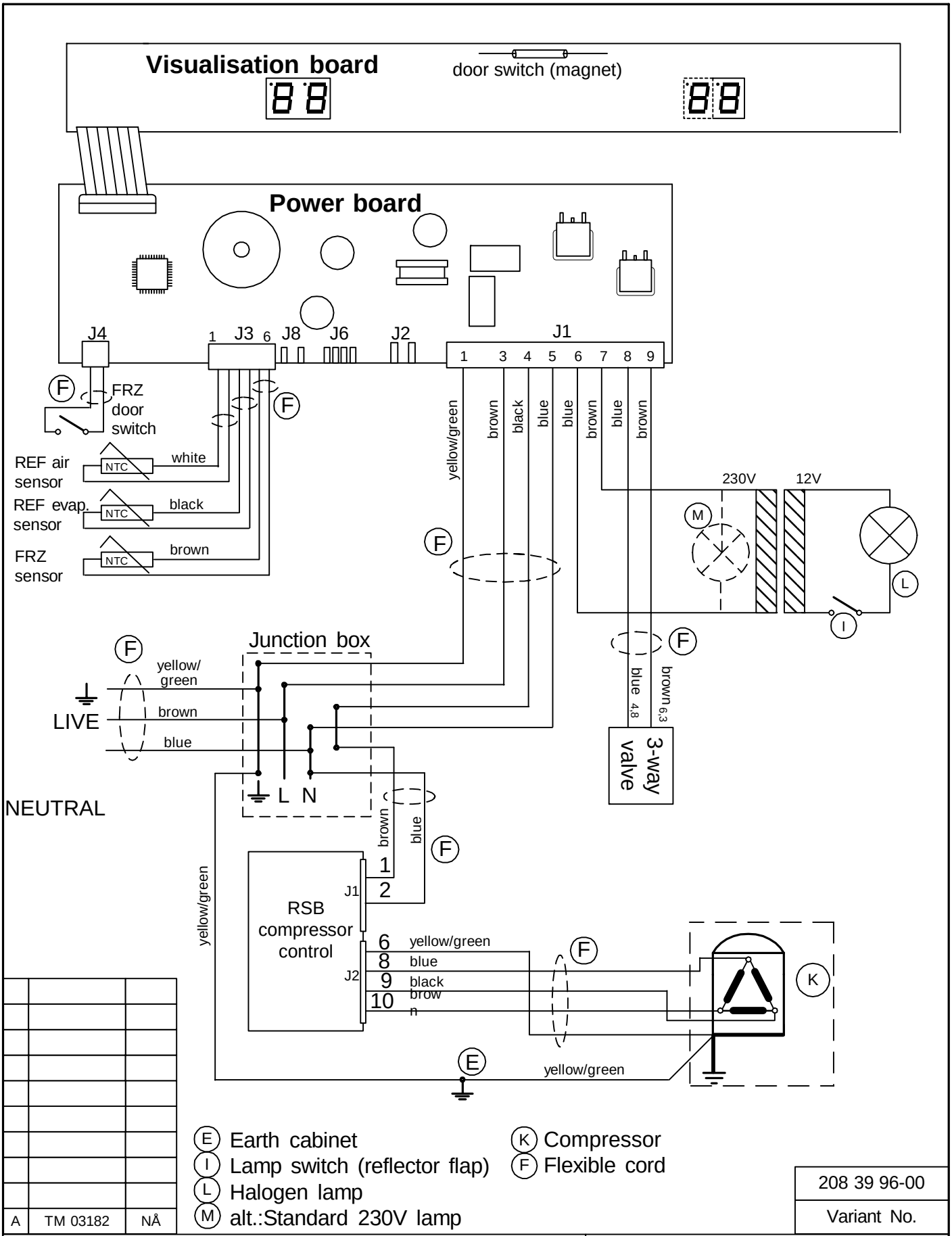

A	TM 03182	NÅ

208 39 96-00

Variant No.

Spec. 103, 122

TITLE

Wiring Diagram

DESIGN OWNER	DRN	CHD	DATE
MA	WHE	APPR.	03-03-05

Kopplingsschema

Electrolux

NUMBER **208 39 96**

REV A

Drawing created in Visio

F:\d\Produktunderlag\Kopplingsscheman\2083996.vsd