Visio®

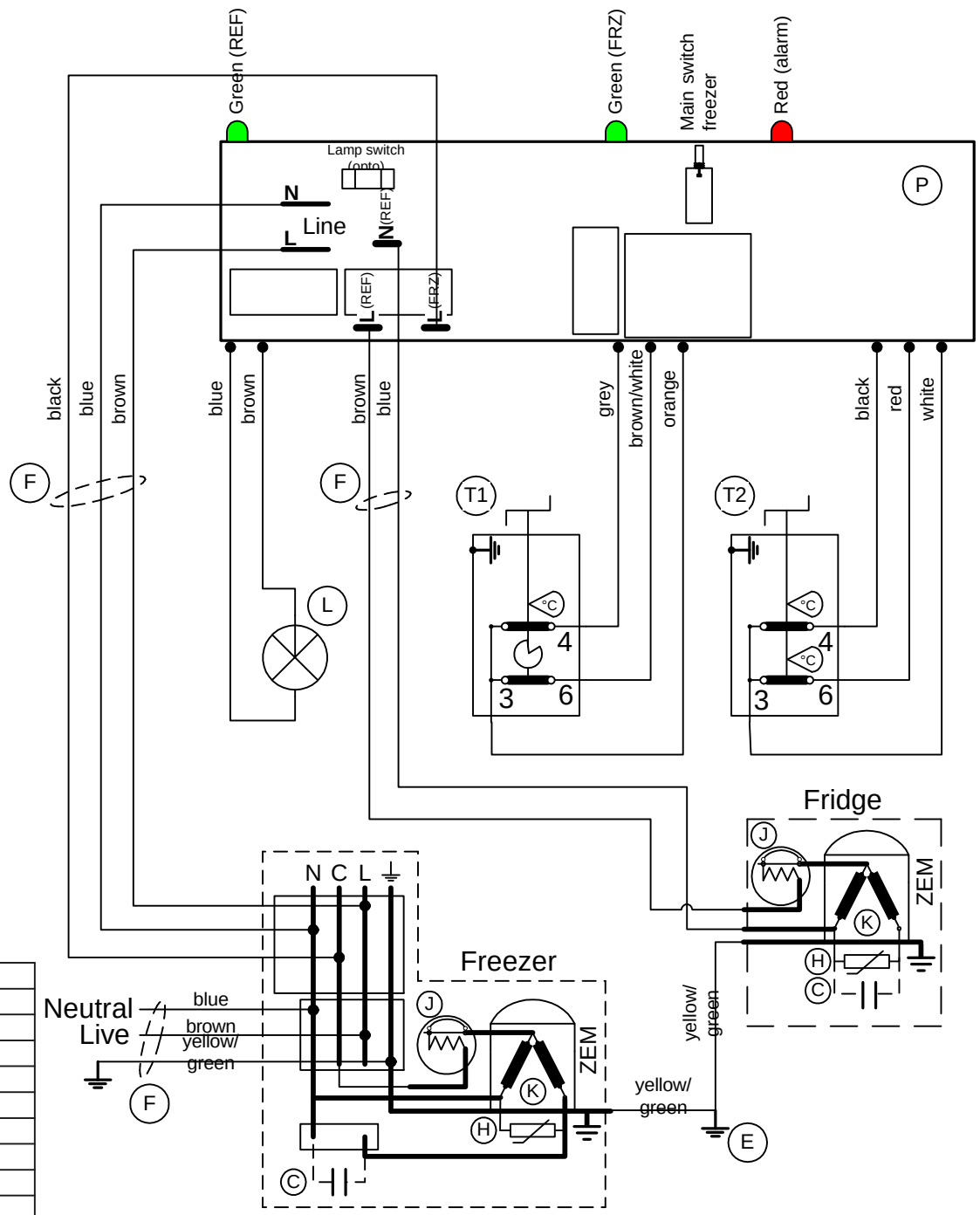

A	FSR 02148	JoJ
	FSR 02119	MB

(C) RUN CAPACITOR
(E) EARTH CABINET
(F) FLEXIBLE CORD
(H) STARTING DEVICE
(J) MOTORPROTECTOR
(K) COMPRESSOR
(L) LAMP
(P) PRINTED CIRCUIT BOARD
(T1) THERMOSTAT FRIDGE
(T2) THERMOSTAT FREEZER

208 27 82-00
Variant No.

is the property of AB ELECTROLUX, SWEDEN
without whose permission it may not be copied, shown
or handed to third party or otherwise used, and it
is to be returned promptly upon request to the
AB Electrolux, Mariestad plant which is responsible
for the drawing.

must be under capability
SAFETY REQUIREMENT
Visible surfaces
Draft angles (not shown):

DEVELOPED FLAT AREA

ANGLES
LENGTHS AND DIAMETERS

MATERIAL
Spec 34

TREATMENT

WEIGHT

DESIGN OWNER
MA

DRN
JoJ

CHD

APPR

DATE
02.03.04

Electrolux

MODEL

SCALE

EUROPEAN METHOD

DESIGN USERS

REPLACES
No

DERIVED FROM
No

SUPPLY SPECIFICATIONS
No

TITLE Kopplingsschema
Wiring diagram

NUMBER 208 27 82

REV A