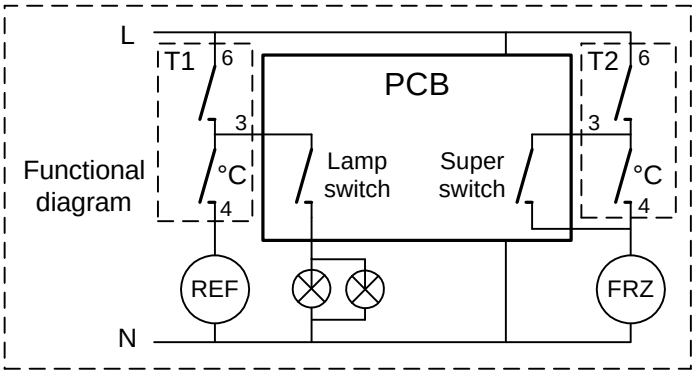

- C RUN CAPACITOR
- E EARTH CABINET
- F FLEXIBLE CORD
- H STARTING DEVICE
- J MOTORPROTECTOR
- K COMPRESSOR
- L HALOGEN LAMP
- P PRINTED CIRCUIT BOARD
- T1 THERMOSTAT FRIDGE
- T2 THERMOSTAT FREEZER

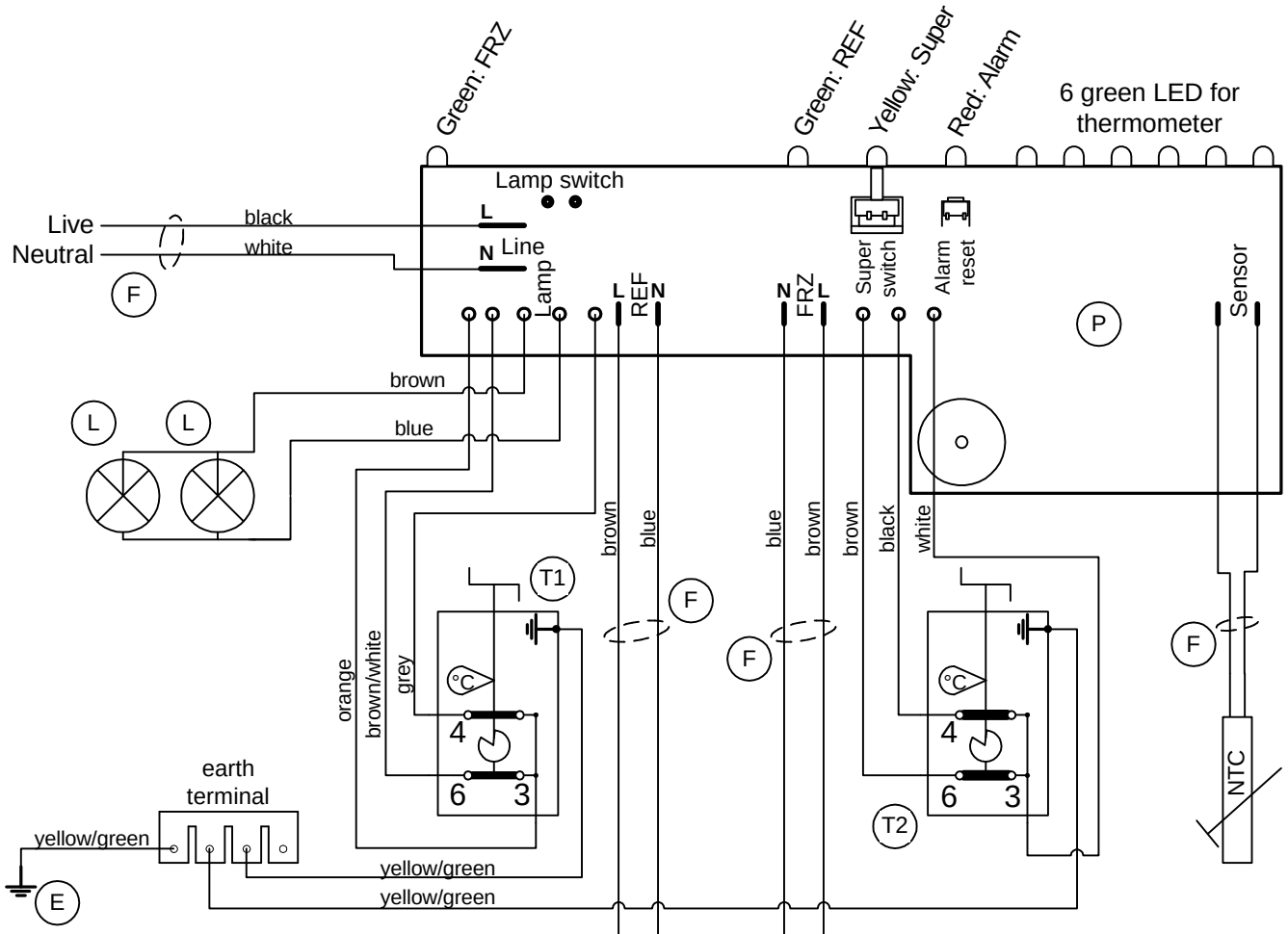

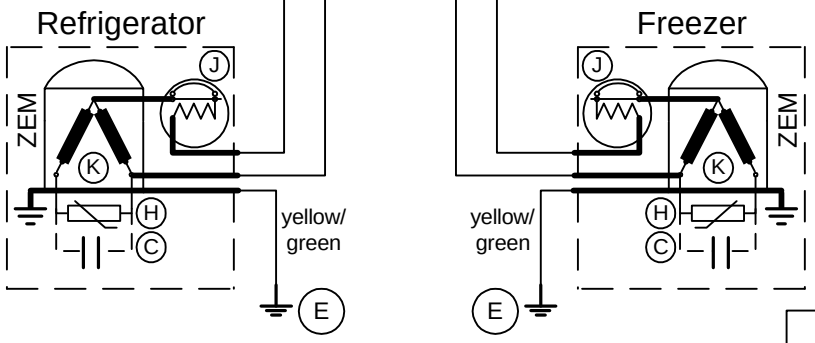

	FSR 01331	FJK

208 25 04-00

Variant No.

Spec. 31

TITLE

Wiring diagram

DESIGN OWNER	DRN	CHD	DATE
MA	JoJ	APPR.	01.05.21

Kopplingsschema

Electrolux

NUMBER **208 25 04**

REV

Drawing created in Visio