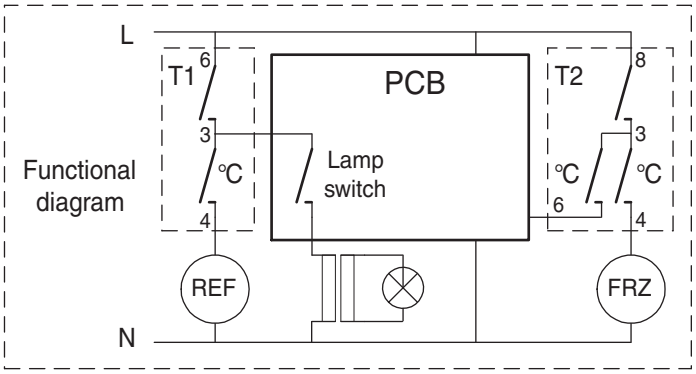

C	RUN CAPACITOR	L	HALOGEN LAMP
E	EARTH CABINET	P	PRINTED CIRCUIT BOARD
F	FLEXIBLE CORD	T1	THERMOSTAT FRIDGE
H	STARTING DEVICE	T2	THERMOSTAT FREEZER
J	MOTORPROTECTOR	Tr	TRANSFORMER
K	COMPRESSOR		

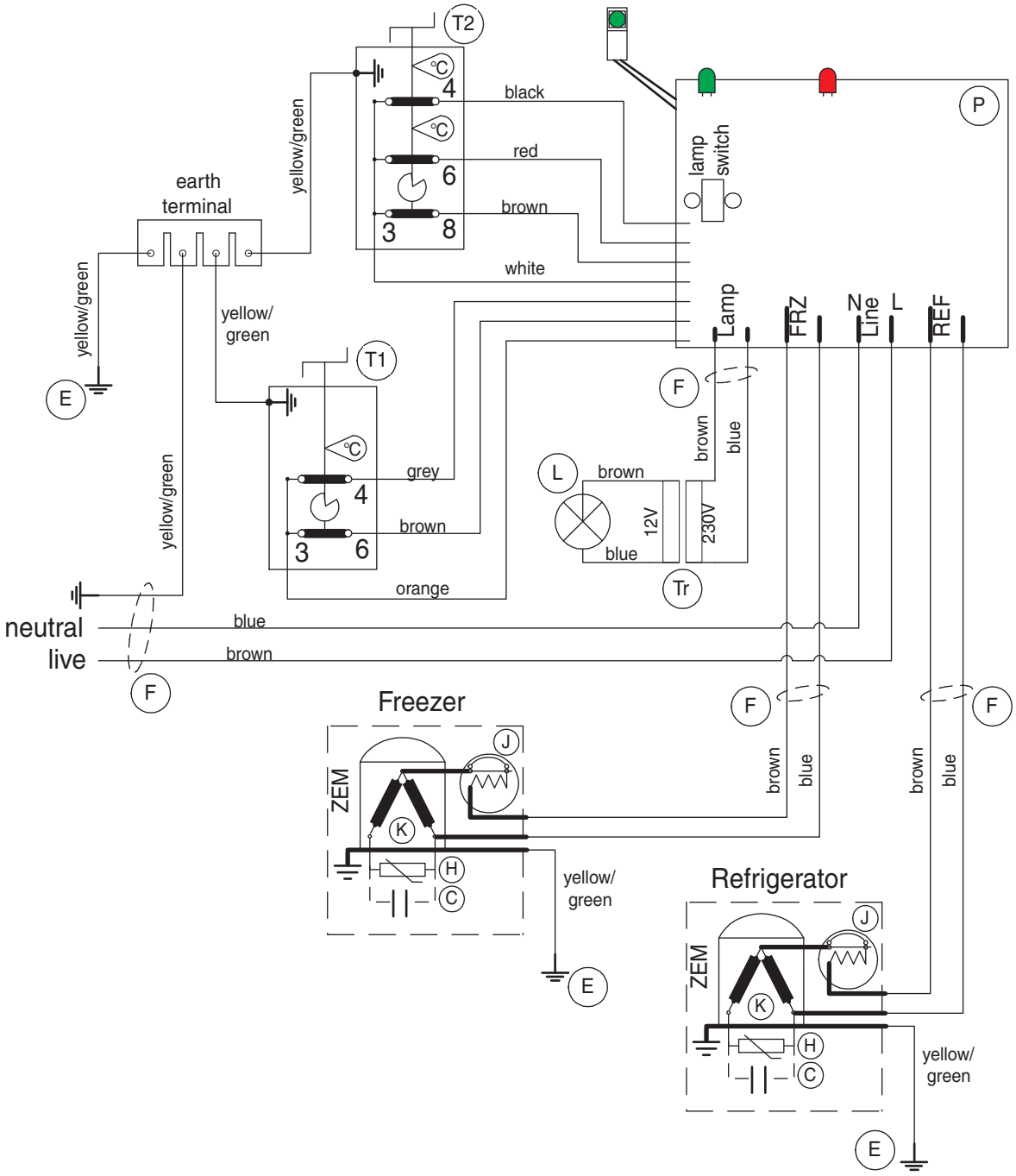

208 22 83-00