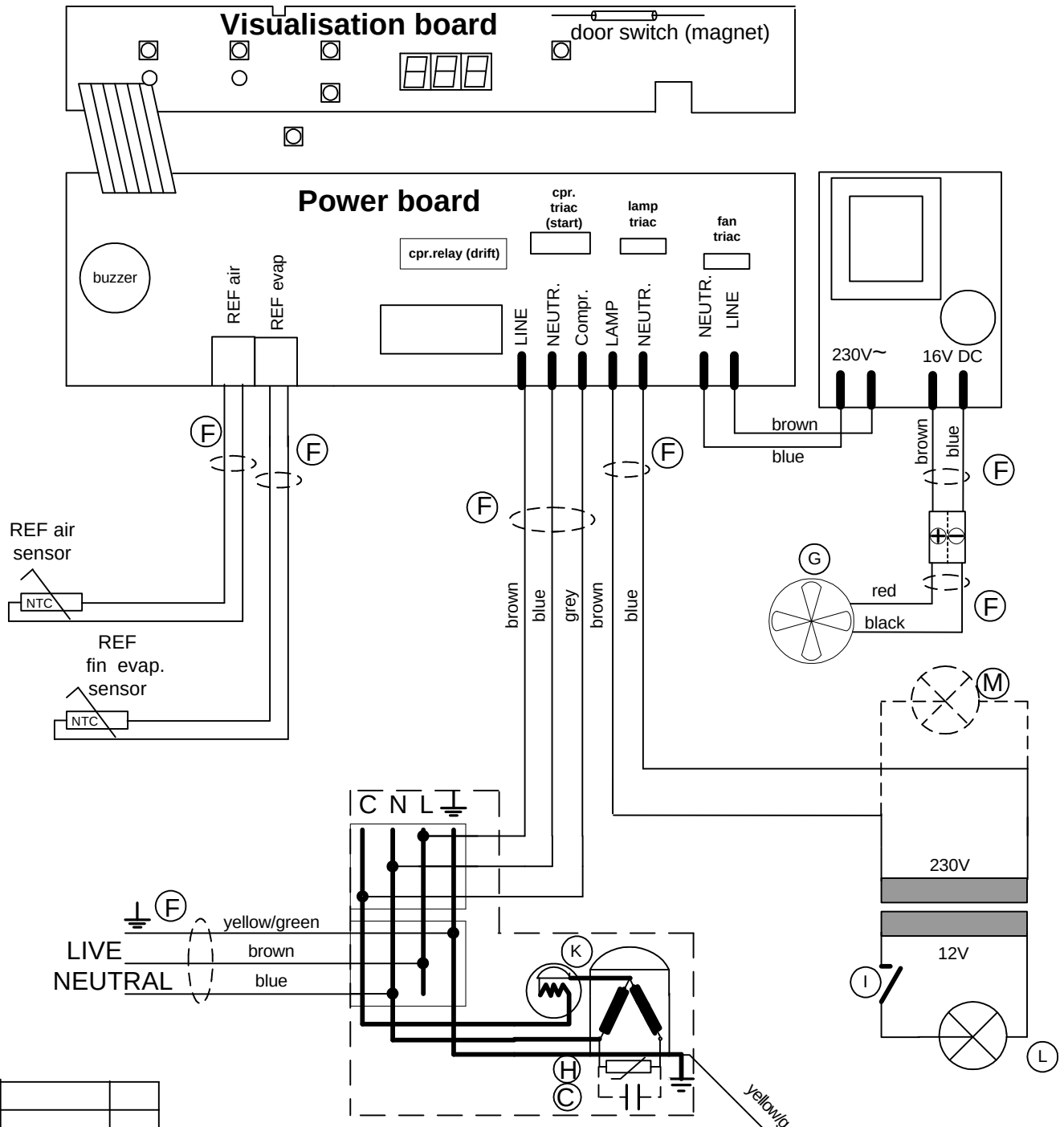

FSR 00360	WHE

208 21 72-00

Variant No.

TITLE

Wiring diagram

DESIGN OWNER	DRN	CHD	DATE
MA	WHE	APPR.	000814

Kopplingsschema

Electrolux

NUMBER

208 21 72

REV.