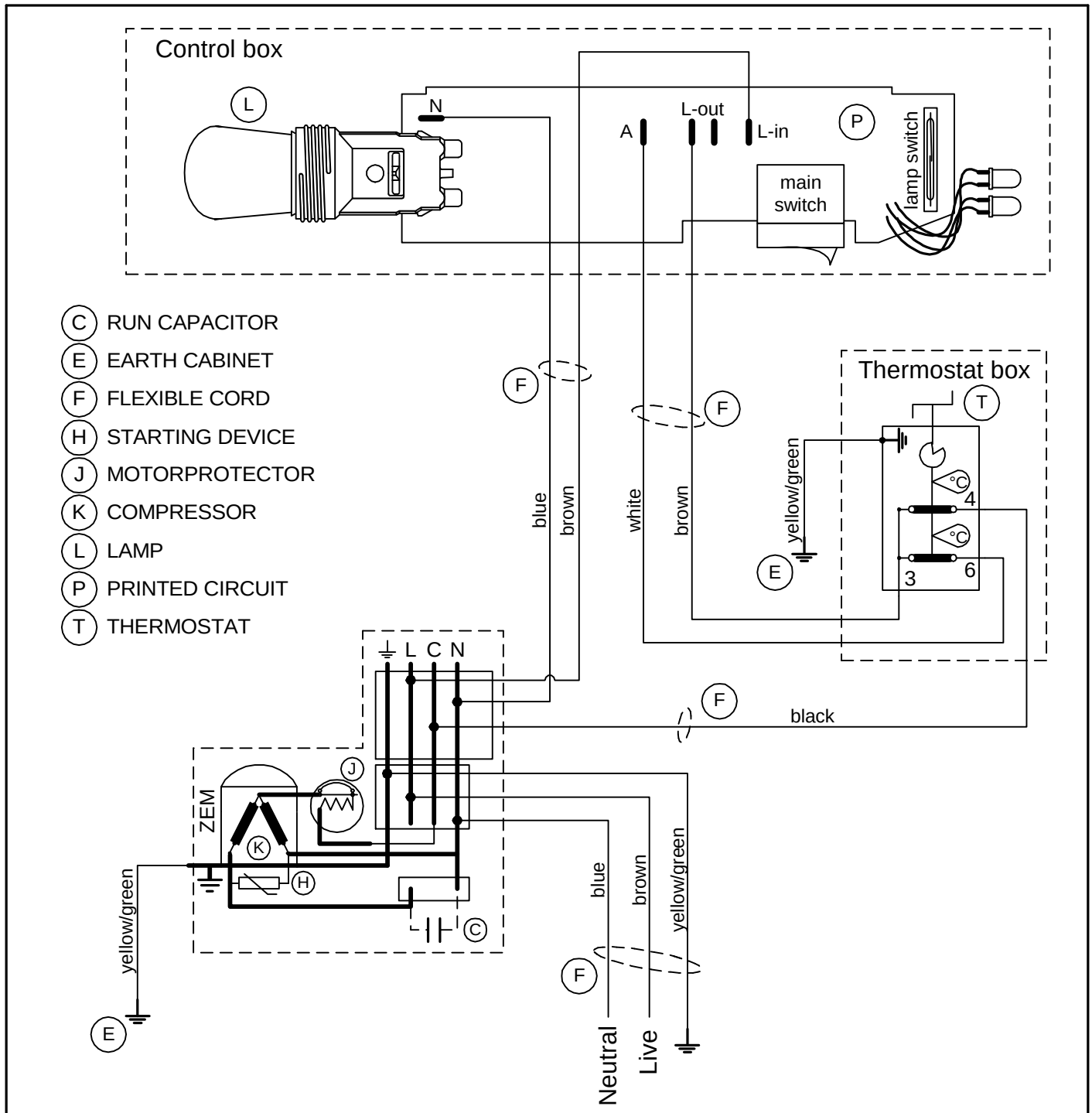

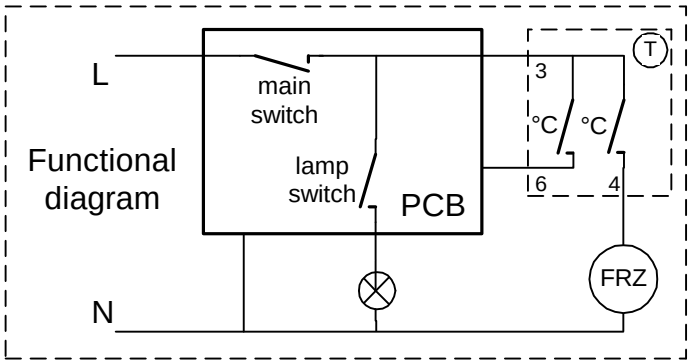

	FSR 00154	NGA

208 17 59-00

Variant No.

Spec. 37/47

TITLE

Wiring diagram

DESIGN OWNER	DRN	CHD	DATE
MA	JoJ	APPR.	00.04.05

Kopplingsschema

Electrolux

NUMBER

208 17 59

REV

Drawing created in Visio

Elux2/Vol1:D\Prod_ulag\Kopp_sch