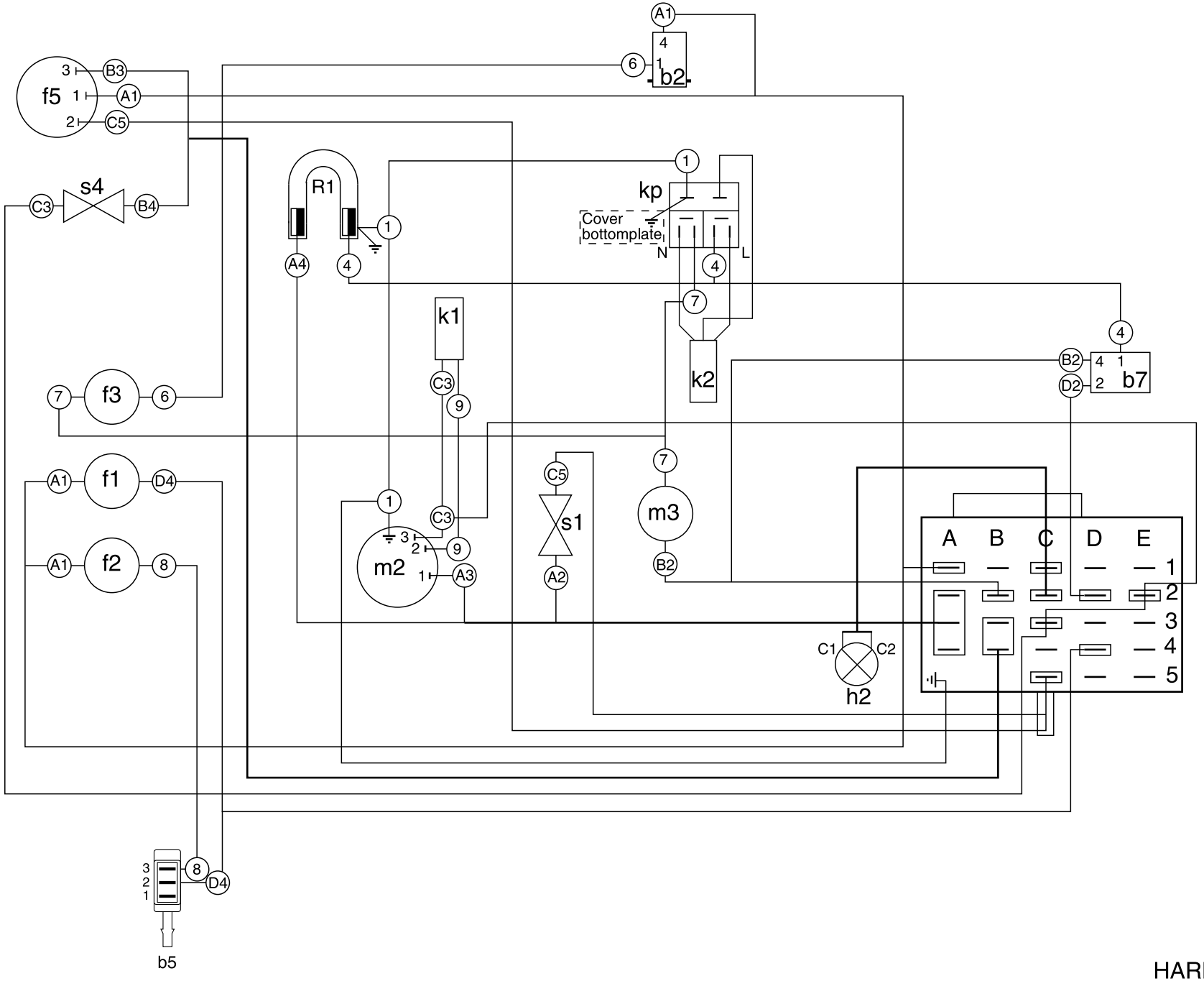

9	White	150 33 27-01
8	Grey	150 42 48-06
7	Blue	150 37 08-24
6	Red/white	150 37 09-19
4	Black	150 37 08-23
1	Yellow/green	150 29 74-05
D4	Black	150 37 08-06
D2	Orange	150 38 63-04
C5	Pink	150 37 08-20
C3	Brown	150 33 28-15
B4	Violet	150 39 93-00
B3	Brown	
B2	White	150 37 08-19
C2	Red	150 39 96-00
C1	Red	
A4	Grey	150 39 85-00
A3	Orange	
A2	Pink	
A1	Brown/white	150 33 28-14
Don	Colour	Kabel no.

HARNESS Level 10

150 39 92

El. circuit diagram: 150 39 91