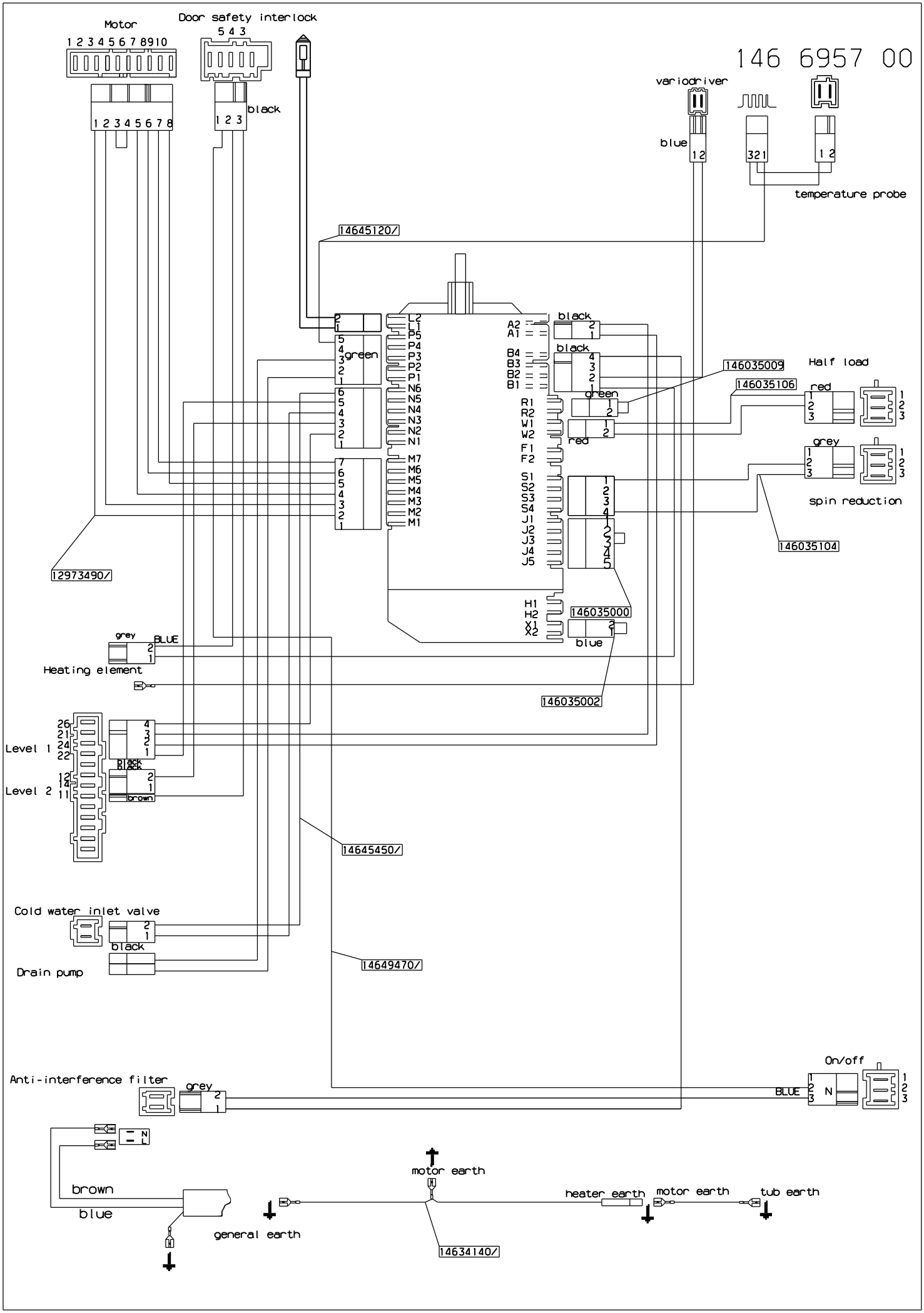
146 6957 00
Motor
1 2 3 4 5 6 7 8 9 10
1 2 3 4 5 6 7 8
Door safety interlock
5 4 3
1 2 3
black
variodriver
blue
1 2
3 2 1
1 2
temperature probe
14645120/
green
L2
L1
P5
P4
P3
P2
P1
N6
N5
N4
N3
N2
N1
M7
M6
M5
M4
M3
M2
M1
A2
A1
B4
B3
B2
B1
R1
R2
W1
W2
F1
F2
S1
S2
S3
S4
J1
J2
J3
J4
J5
H1
H2
X1
X2
black
black
green
red
146035009
146035106
Half load
red
grey
spin reduction
146035104
12973490/
146035000
blue
grey
BLUE
Heating element
146035002
26
21
24
22
Level 1
12
14
11
Level 2
black
black
brown
14645450/
Cold water inlet valve
black
Drain pump
14649470/
Anti-interference filter
grey
On/off
BLUE
N
brown
blue
general earth
motor earth
heater earth
motor earth
tub earth
14634140/