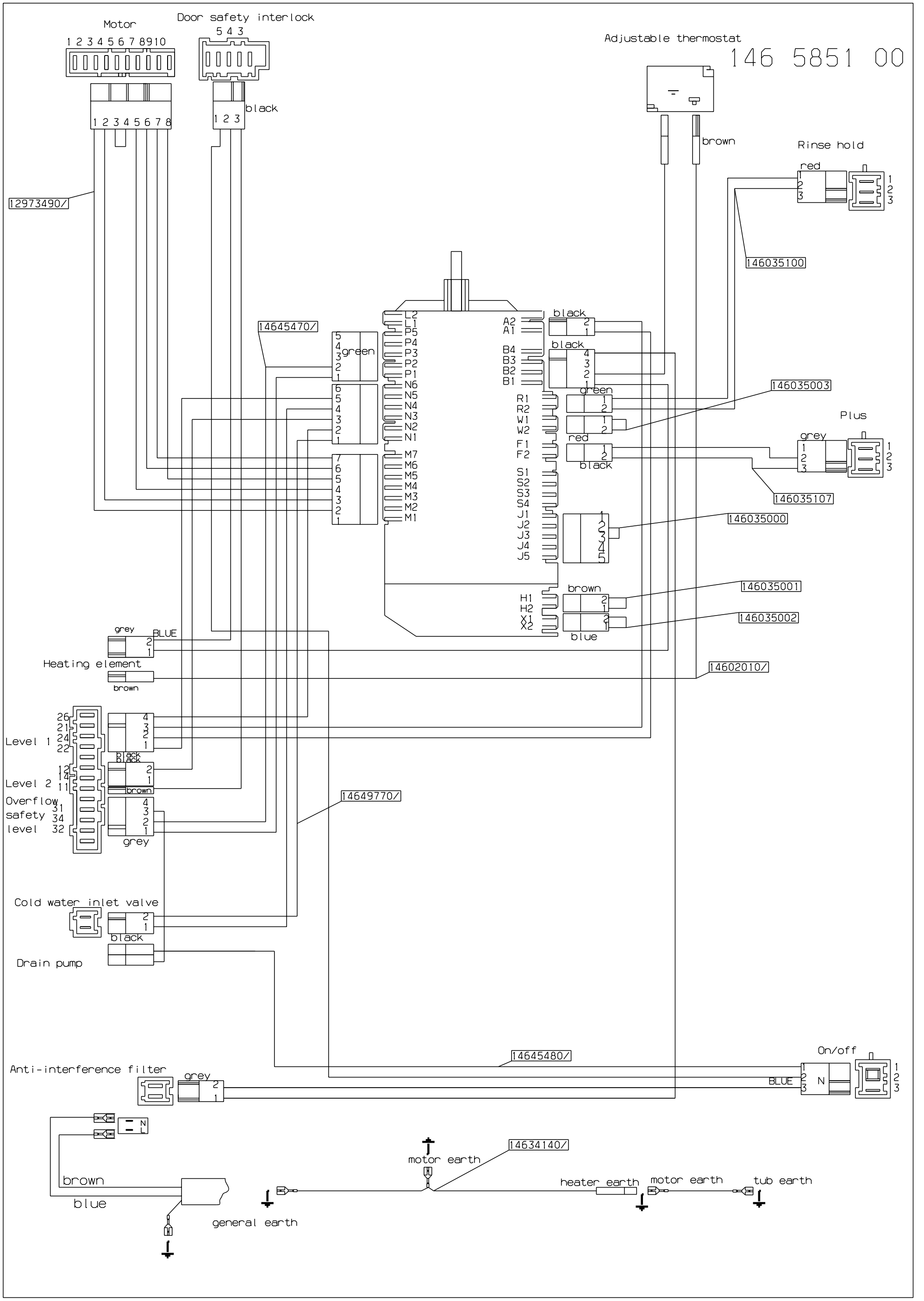
146 5851 00
Motor
1 2 3 4 5 6 7 8 9 10
1 2 3 4 5 6 7 8
Door safety interlock
5 4 3
1 2 3
black
Adjustable thermostat
brown
Rinse hold
red
1 2 3
12973490/
146035100
14645470/
green
L2
L1
P5
P4
P3
P2
P1
N6
N5
N4
N3
N2
N1
M7
M6
M5
M4
M3
M2
M1
A2
A1
black
B4
B3
B2
B1
black
R1
R2
W1
W2
green
F1
F2
red
black
146035003
Plus
grey
1 2 3
146035107
S1
S2
S3
S4
J1
J2
J3
J4
J5
146035000
H1
H2
X1
X2
brown
blue
146035001
146035002
grey
BLUE
Heating element
brown
14602010/
Level 1
26
21
24
22
black
black
Level 2
12
14
11
brown
Overflow
safety
level
31
34
32
grey
14649770/
Cold water inlet valve
black
Drain pump
14645480/
On/off
Anti-interference filter
grey
BLUE
N
N
L
brown
blue
14634140/
motor earth
heater earth
motor earth
tub earth
general earth