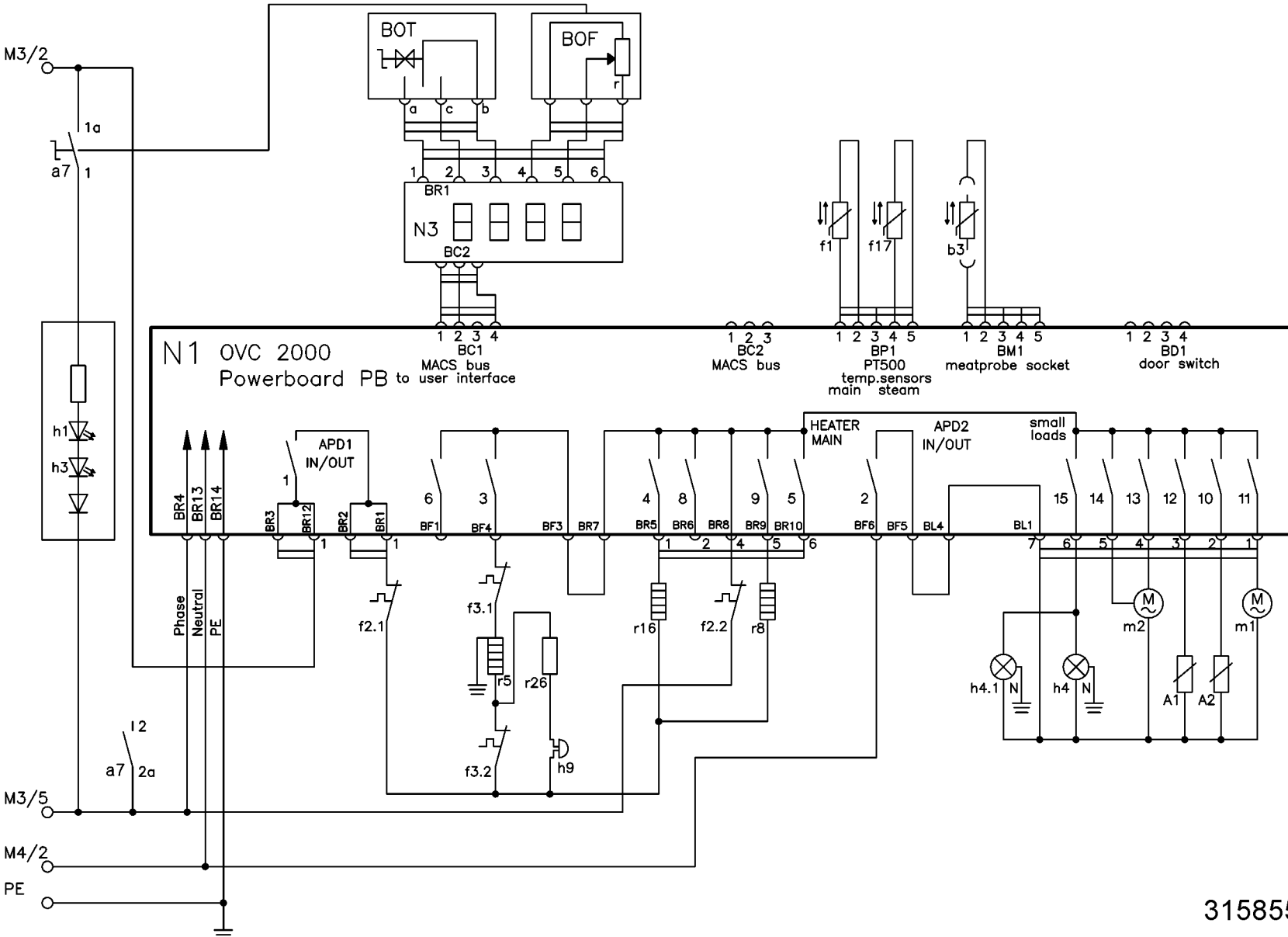
M3/2
1a
a7 1
BOT
BOF
a c b
r
1 2 3 4 5 6
BR1
N3
BC2
f1
f17
b3
N1 OVC 2000
Powerboard PB
1 2 3 4
BC1
MACS bus
to user interface
1 2 3
BC2
MACS bus
1 2 3 4 5
BP1
PT500
temp.sensors
main steam
1 2 3 4 5
BM1
meatprobe socket
1 2 3 4
BD1
door switch
h1
h3
BR4 BR13 BR14
Phase
Neutral
PE
APD1
IN/OUT
BR3 BR12 BR2 BR1
BF1 BF4 BF3 BR7 BR5 BR6 BR8 BR9 BR10 BF6 BF5 BL4 BL1
HEATER
MAIN
APD2
IN/OUT
small
loads
f2.1
f3.1
r5
r26
f3.2
h9
r16
f2.2
r8
m2
m1
h4.1
h4
A1
A2
I 2
a7 2a
M3/5
M4/2
PE

315855200