146 8418 00

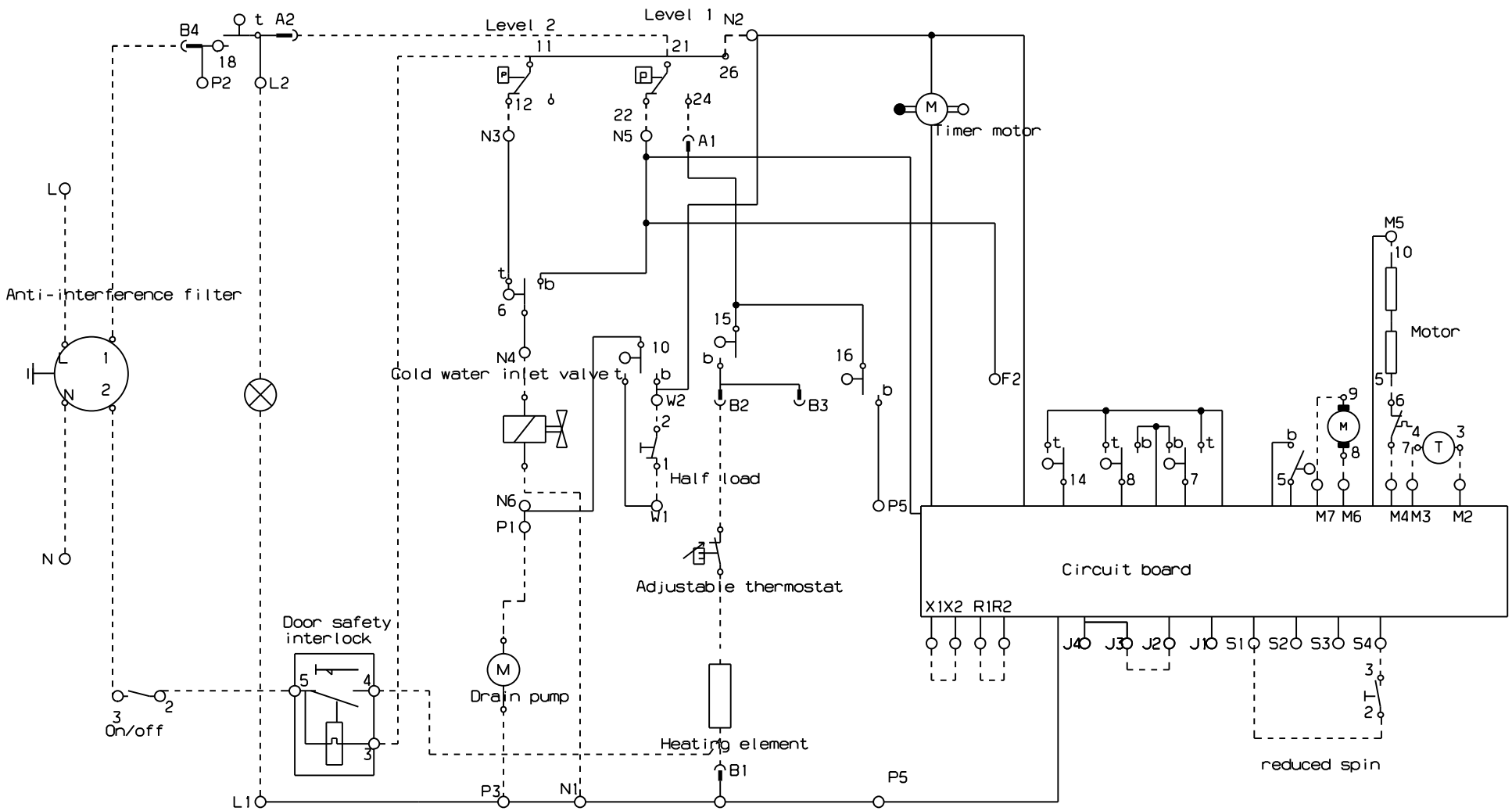

Level 2
Level 1
Timer motor
Anti-interference filter
Cold water inlet valve
Half load
Adjustable thermostat
Door safety interlock
Drain pump
Heating element
On/off
Motor
Circuit board
reduced spin