146 4233 00

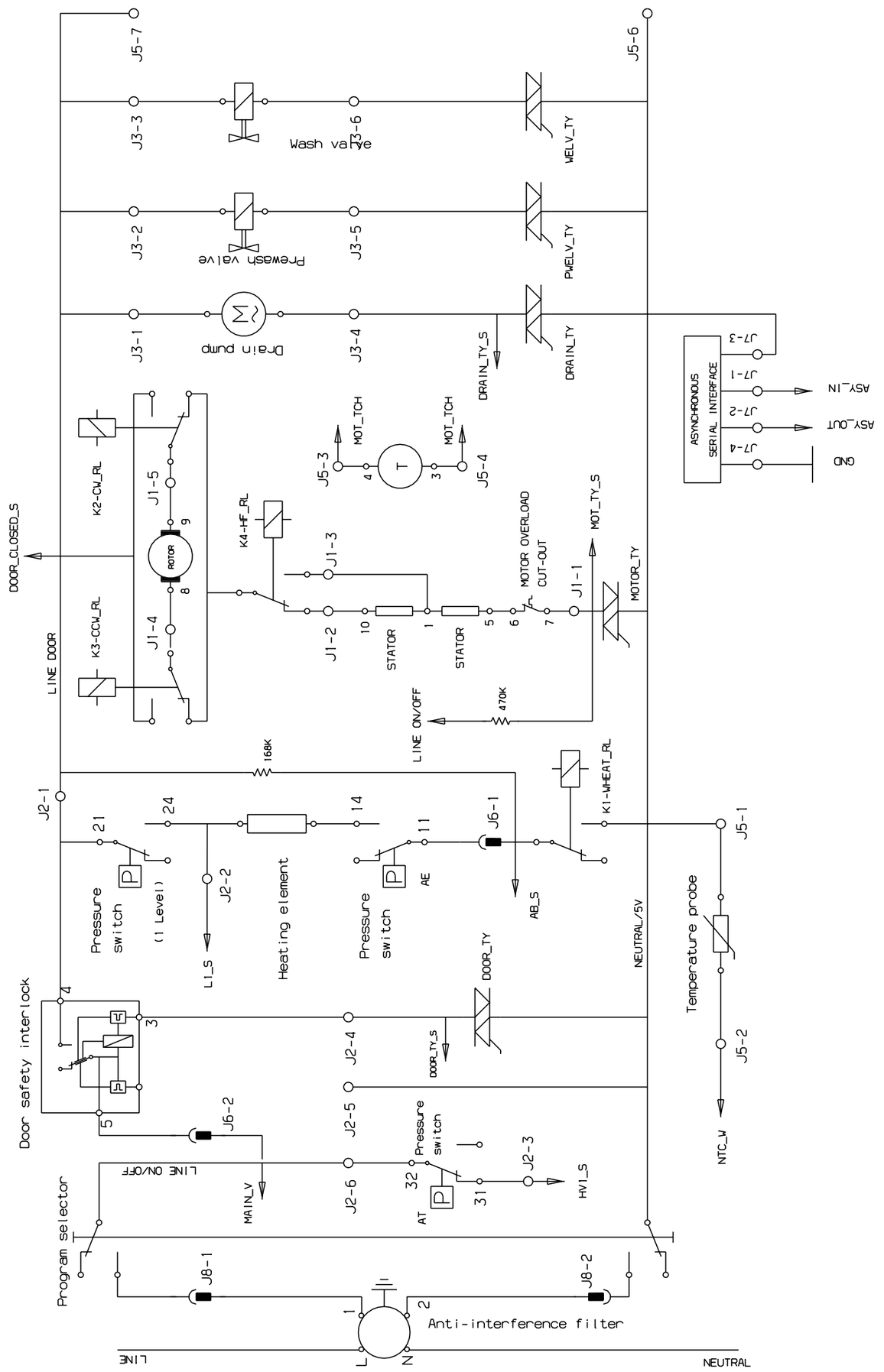
J5-7
J3-3
J3-6
Wash valve
WELV_TY
J5-6
J3-2
J3-5
Prewash valve
PWELV_TY
J3-1
J3-4
Drain pump
DRAIN_TY_S
DRAIN_TY
ASYNCHRONOUS SERIAL INTERFACE
J7-3
J7-1
J7-2
J7-4
ASY_IN
ASY_OUT
GND
J5-3
MOT_TCH
J5-4
K2-CW_RL
J1-5
K4-HF_RL
J1-3
MOTOR OVERLOAD CUT-OUT
J1-1
MOT_TY_S
MOTOR_TY
DOOR_CLOSED_S
ROTOR
K3-CCW_RL
J1-4
J1-2
STATOR
LINE DOOR
LINE ON/OFF
470K
168K
K1-WHEAT_RL
J2-1
J6-1
J5-1
Pressure switch
(1 Level)
J2-2
L1_S
Heating element
AE
AB_S
NEUTRAL/5V
Temperature probe
Door safety interlock
J2-4
DOOR_TY
DOOR_TY_S
J5-2
J6-2
J2-5
Pressure switch
J2-3
HV1_S
NTC_W
LINE ON/OFF
MAIN_V
J2-6
AT
Program selector
J8-1
J8-2
Anti-interference filter
LINE
NEUTRAL