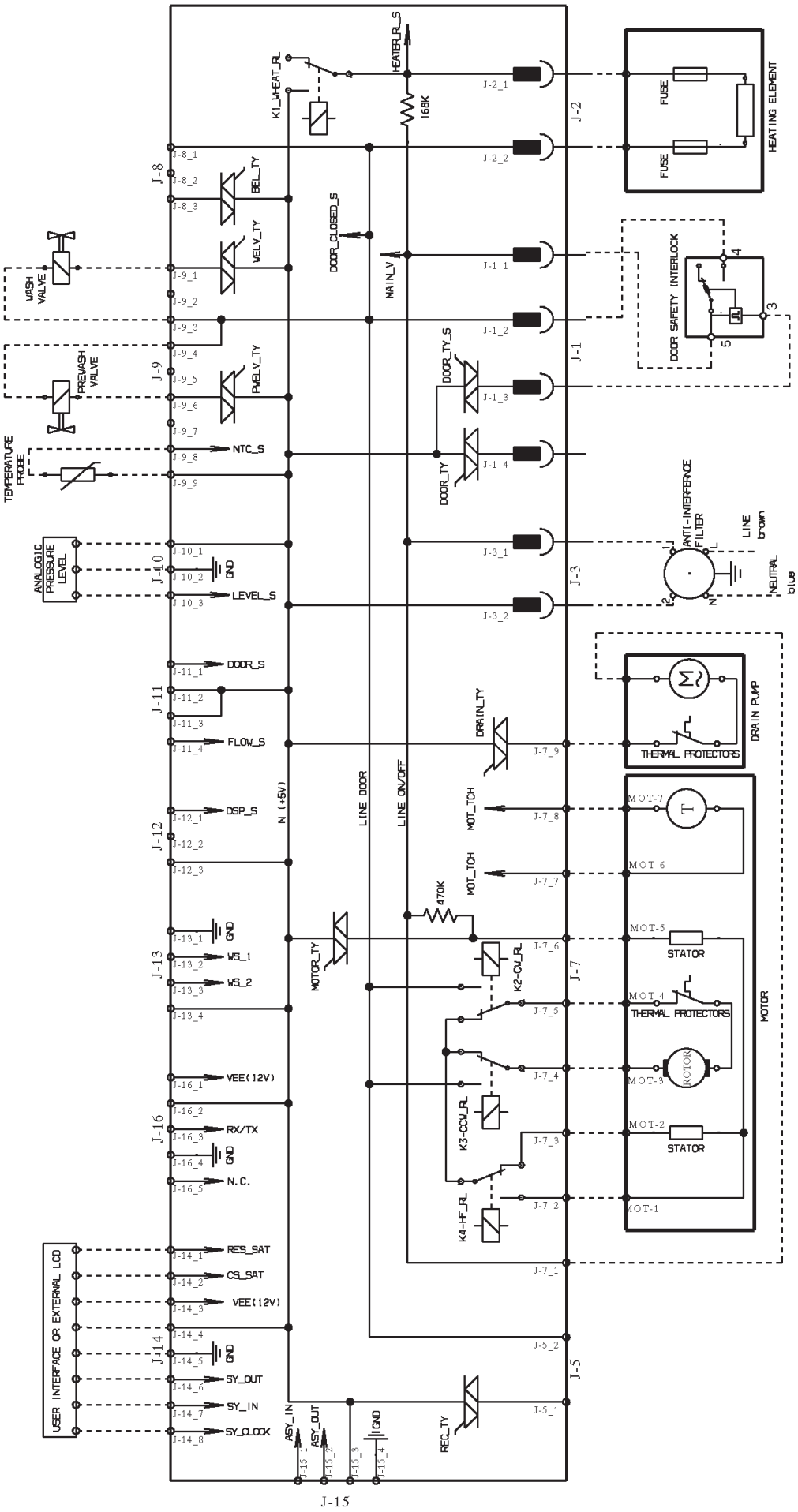

STR 108 364 500

© Electrolux