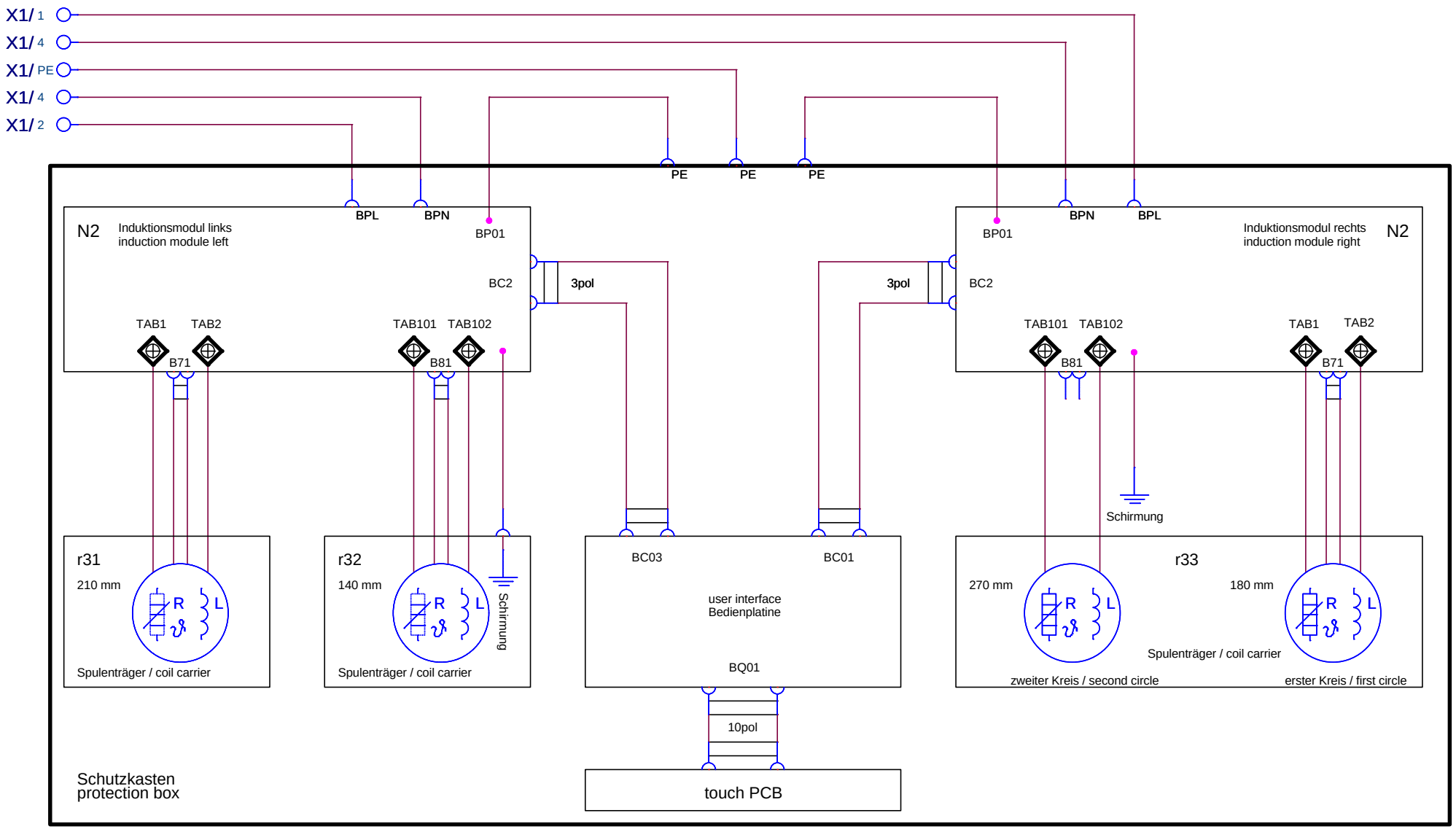

THE ITEM(S) SHOWN IN THIS DRAWING MUST NOT CONTAIN FORMALDEHYDE, CADMIUM, MERCURY, ASBESTOS ORPBB/PBDO.

THIS DRAWING CONTAINS CONFIDENTIAL INFORMATIONS. IT'S PROPERTY OF ELECTROLUX WITHOUT WHOSE PERMISSION IT MAY NOT BE COPIED, SHOWN OR HANDED TO A THIRD PARTY OR OTHERWISE USED, AND IT IS TO BE RETURNED PROMPTLY UPON REQUEST TO ELECTROLUX WHICH IS RESPONSIBLE FOR THE DRAWING.

[2] CRITICAL DIMENSIONS WHICH MUST BE UNDER CAPABILITY

SAFETY RISKS

: VISIBLE SURFACES

DRAFT ANGLES (NOT SHOWN): 00°00'00"

THEORETICAL FLAT AREA -

DEVELOPED FLAT AREA -

GENERAL TOLERANCES

ANGLES : ±-°

LENGTHS AND DIAMETERS:
<5 mm. : ±-
5 - 18 mm. : ±-
18 - 80 mm. : ±-
>80 mm. : ±-

A4

A	first edition			Weiß	DGT40666	2006-06-07
ZUST	MODIFICATIONS			SIGNATURE	REQUEST	DATE

DESIGN OWNER	DRN	CHD	DATE	DESIGN USERS	EUROPEAN METHOD
DGT	DGR-PE_PD	Weiß / APPR Weiß	2006-05-23		

Electrolux

TITLE circuit diagram induction TAP2

TITEL Schaltplan Induktion TAP2

NUMBER 387 3486 SHEET 01(01) REV A