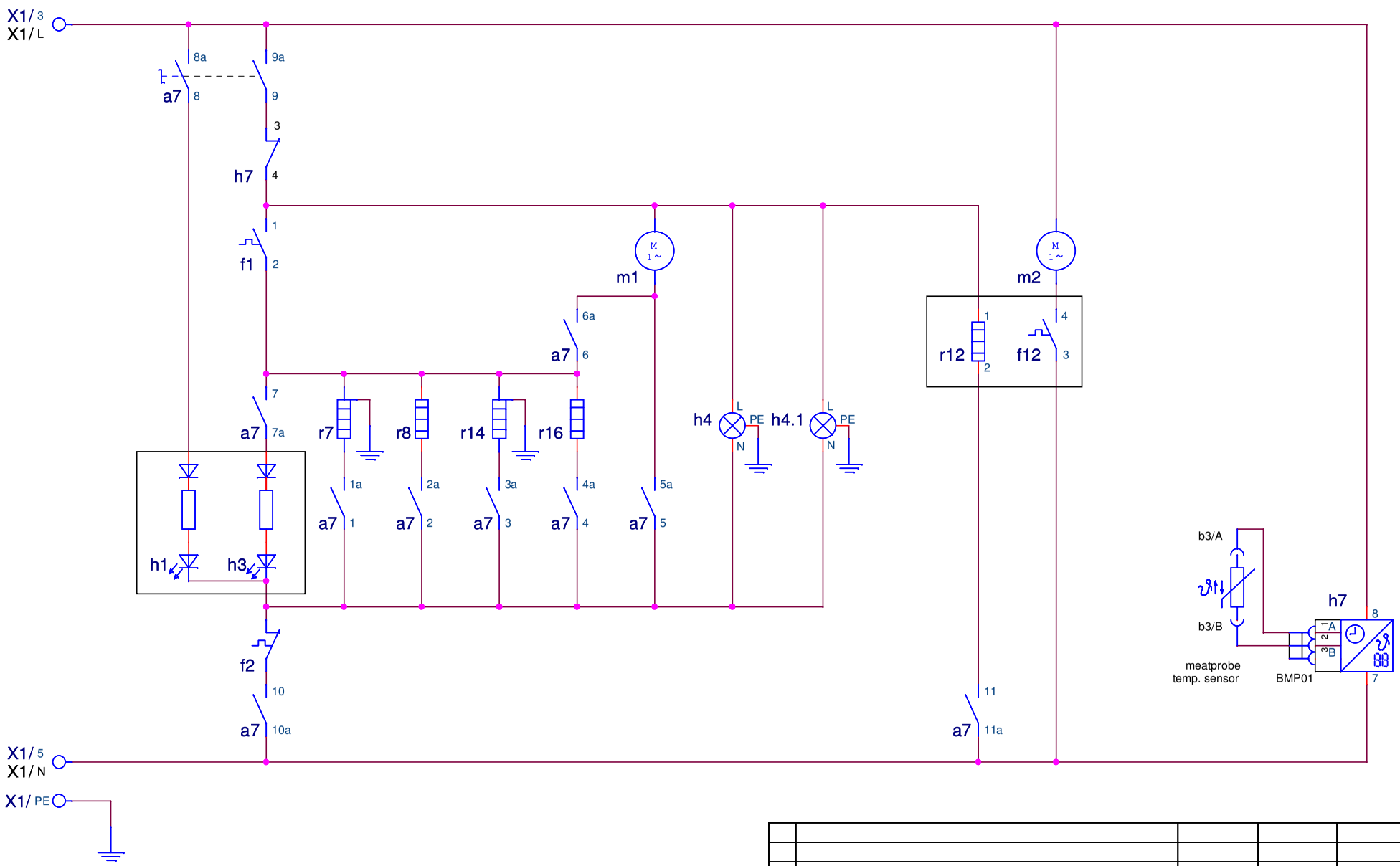


THE ITEM(s) SHOWN IN THIS DRAWING MUST NOT CONTAIN FORMALDEHYDE, CADMIUM, MERCURY, ASBESTOS ORPBB/PBDO.

THIS DRAWING CONTAINS CONFIDENTIAL INFORMATIONS. IT'S PROPERTY OF ELECTROLUX WITHOUT WHOSE PERMISSION IT MAY NOT BE COPIED, SHOWN OR HANDED TO A THIRD PARTY OR OTHERWISE USED, AND IT IS TO BE RETURNED PROMPTLY UPON REQUEST TO ELECTROLUX WHICH IS RESPONIBLE FOR THE DRAWING.

[2] CRITICAL DIMENSIONS WHICH MUST BE UNDER CAPABILITY

SAFETY RISKS

- - - : VISIBLE SURFACES
DRAFT ANGLES (NOT SHOWN): 00°00'00"

THEORETICAL FLAT AREA -

DEVELOPED FLAT AREA -

GENERAL TOLERANCES

ANGLES : ±-°

LENGTHS AND DIAMETERS:
<18 mm. : ±-
18 - 80 mm. : ±-
>80 mm. : ±-

A4

| | | | | |
|---|---|---|---|---|
| A | new drawing created | Renner | DGT 37320 | 2006-03-29 |
| ZUST | MODIFICATIONS | SIGNATURE | REQUEST | DATE |

| DESIGN | OWNER | DRN | CHD | DATE | DESIGN | USERS | EUROPEAN METHOD |
|---|---|---|---|---|---|---|---|
| DGT | | DGR-PE_PD | Renner / APPR Renner | 2006-03-29 | - | - | |

Electrolux

TITLE circuit diagram oven
TITEL Schaltplan Herd

NUMBER 387 2879 SHEET 01 (01) REV A