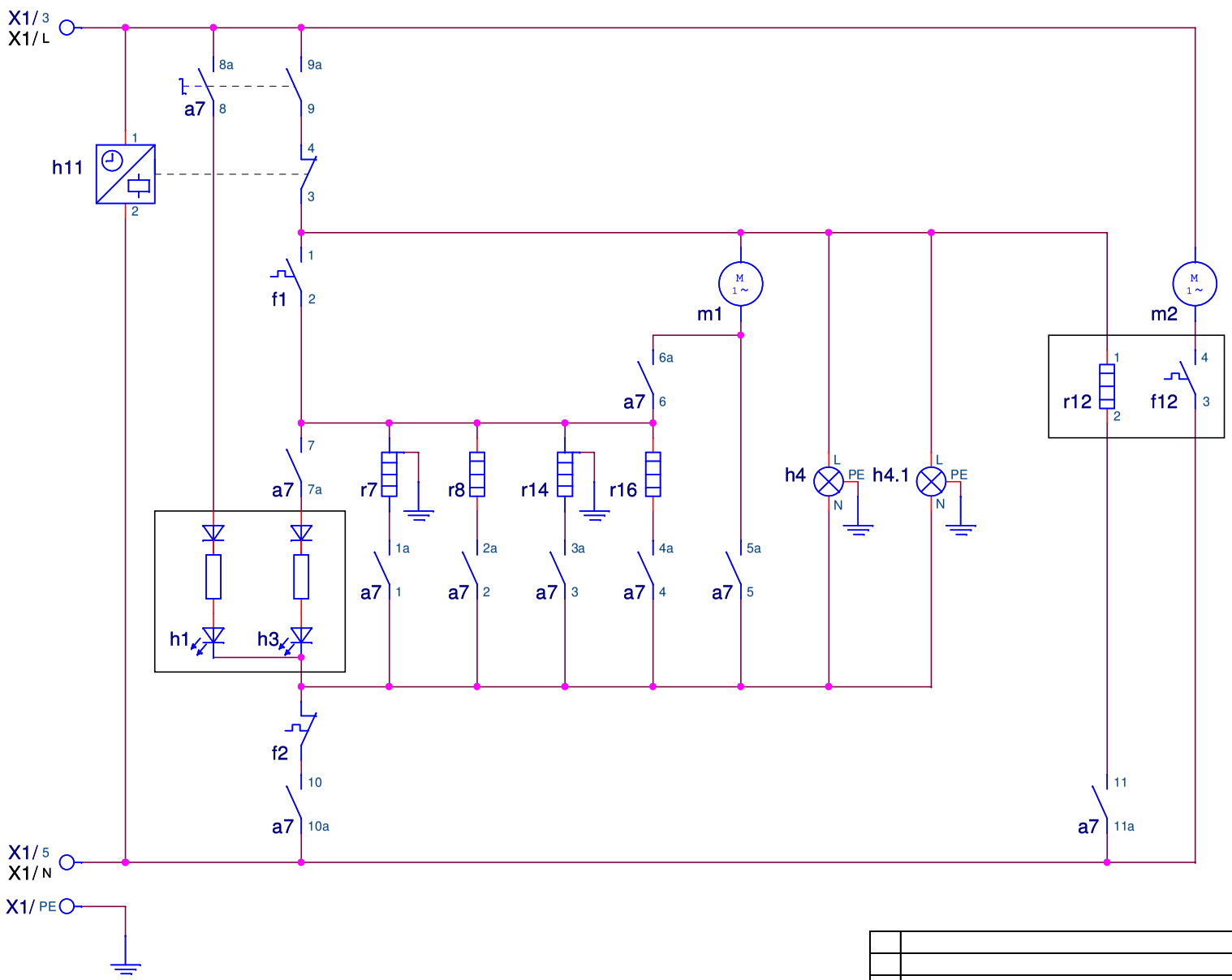

THE ITEM(s) SHOWN IN THIS DRAWING MUST NOT CONTAIN FORMALDEHYDE, CADMIUM, MERCURY, ASBESTOS ORPBB/PBDO.

THIS DRAWING CONTAINS CONFIDENTIAL INFORMATIONS. IT'S PROPERTY OF ELECTROLUX WITHOUT WHOSE PERMISSION IT MAY NOT BE COPIED, SHOWN OR HANDED TO A THIRD PARTY OR OTHERWISE USED, AND IT IS TO BE RETURNED PROMPTLY UPON REQUEST TO ELECTROLUX WHICH IS RESPONIBLE FOR THE DRAWING.

[2] CRITICAL DIMENSIONS WHICH MUST BE UNDER CAPABILITY

SAFETY RISKS

- - - : VISIBLE SURFACES
DRAFT ANGLES (NOT SHOWN): 00°00'00"

THEORETICAL FLAT AREA -

DEVELOPED FLAT AREA -

GENERAL TOLERANCES

ANGLES : ±-°

LENGTHS AND DIAMETERS:
<18 mm. : ±-
18 - 80 mm. : ±-
>80 mm. : ±-

A4

A	new drawing created	Renner	DGT 37320	2006-03-09
ZUST	MODIFICATIONS	SIGNATURE	REQUEST	DATE

DESIGN	OWNER	DRN	CHD	DATE	DESIGN	USERS	EUROPEAN METHOD
DGT		DGR-PE_PD	Renner / APPR Renner	2006-03-09	-	-	

Electrolux

TITLE circuit diagram oven

TITEL Schaltplan Herd

NUMBER 387 2826 SHEET 01 (01) REV A