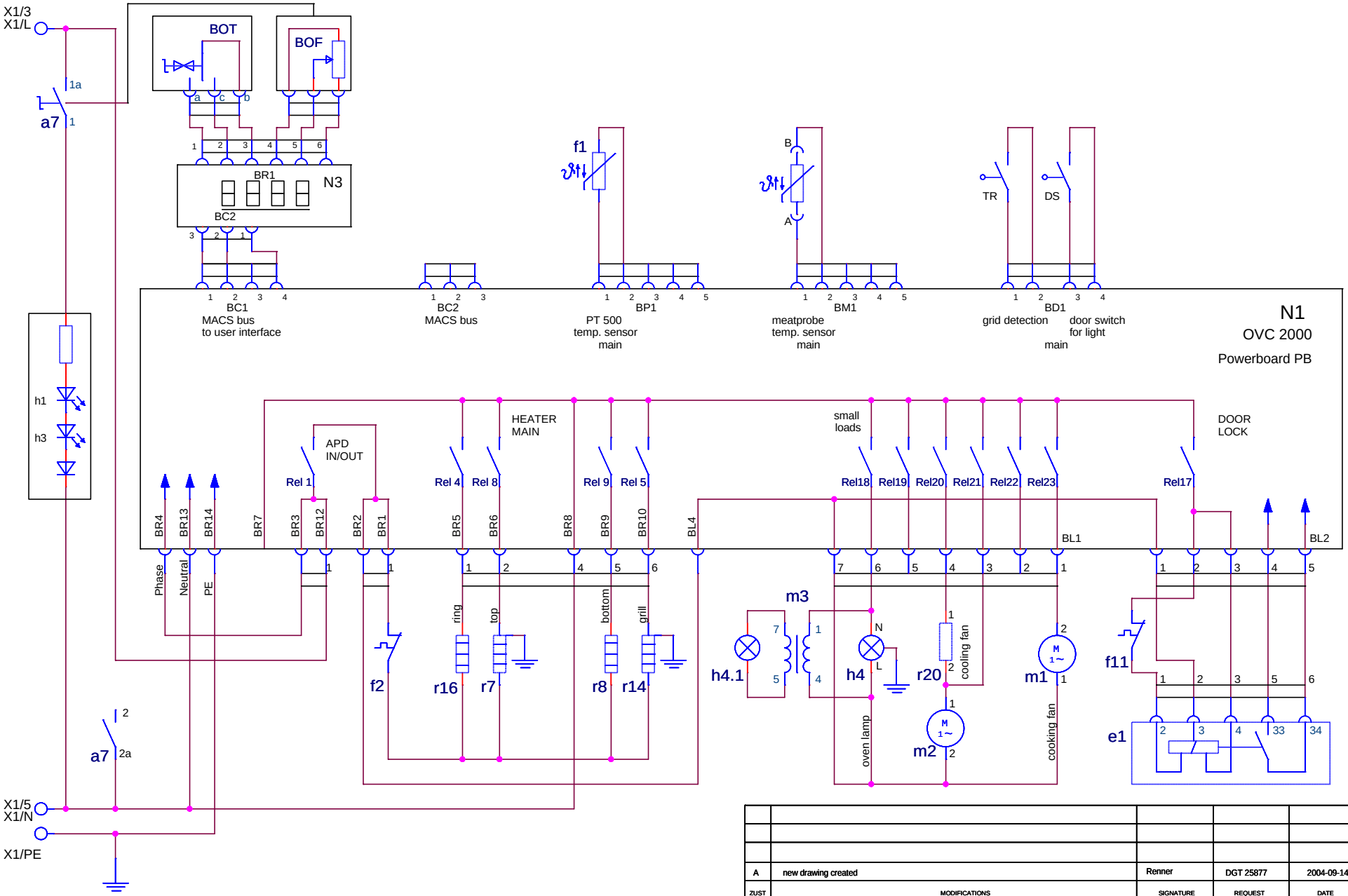

A	new drawing created	Renner	DGT 25877	2004-09-14
ZUST	MODIFICATIONS	SIGNATURE	REQUEST	DATE

DESIGN OWNER	DRN	CHD	DATE	DESIGN	USERS	EUROPEAN METHOD
DGT	DGR-PE_PD	Renner / APPR Renner	2004-09-14	-	-	

Electrolux

TITLE circuit diagram oven
TITEL Schaltplan Herd
NUMBER 387 0531 SHEET 01(01) REV A

A4

THE ITEM(S) SHOWN IN THIS DRAWING MUST NOT CONTAIN FORMALDEHYDE, CADMIUM, MERCURY, ASBESTOS ORPBB/PBDO.

THIS DRAWING CONTAINS CONFIDENTIAL INFORMATIONS. IT'S PROPERTY OF ELECTROLUX WITHOUT WHOSE PERMISSION IT MAY NOT BE COPIED, SHOWN OR HANDED TO A THIRD PARTY OR OTHERWISE USED, AND IT IS TO BE RETURNED PROMPTLY UPON REQUEST TO ELECTROLUX WHICH IS RESPONIBLE FOR THE DRAWING.

[2] CRITICAL DIMENSIONS WHICH MUST BE UNDER CAPABILITY

SAFETY RISKS : VISIBLE SURFACES

DRAFT ANGLES (NOT SHOWN): 00°00'00"

THEORETICAL FLAT AREA -

DEVELOPED FLAT AREA -

GENERAL TOLERANCES

ANGLES : ±-°

LENGTHS AND DIAMETERS:
<18 mm. : ±--
18 - 80 mm. : ±---
>80 mm. : ±----