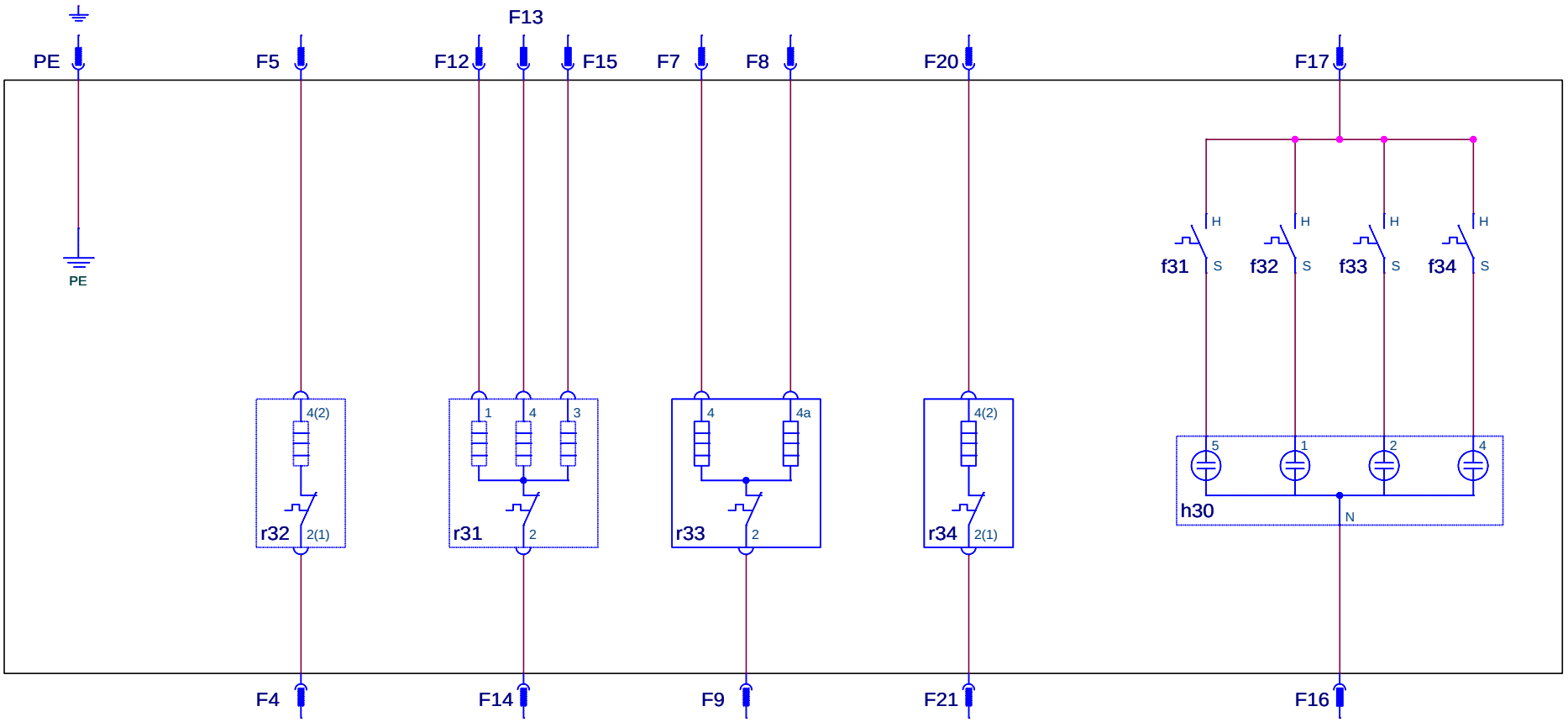

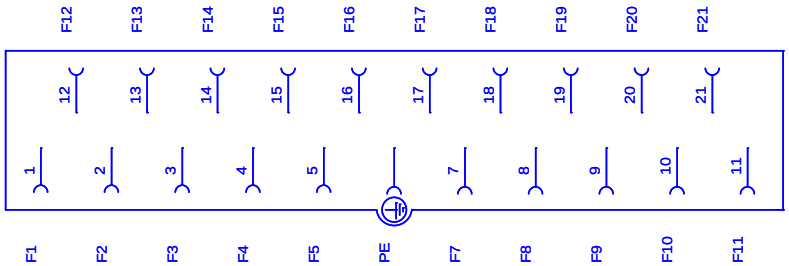

THE ITEM(S) SHOWN IN THIS DRAWING MUST NOT CONTAIN FORMALDEHYDE, CADMIUM, MERCURY, ASBESTOS OR PBB/PBDO.

THIS DRAWING CONTAINS CONFIDENTIAL INFORMATIONS. IT'S PROPERTY OF ELECTROLUX WITHOUT WHOSE PERMISSION IT MAY NOT BE COPIED, SHOWN OR HANDED TO A THIRD PARTY OR OTHERWISE USED, AND IT IS TO BE RETURNED PROMPTLY UPON REQUEST TO ELECTROLUX WHICH IS RESPONIBLE FOR THE DRAWING.

[2] CRITICAL DIMENSIONS WHICH MUST BE UNDER CAPABILITY

SAFETY RISKS

VISIBLE SURFACES

DRAFT ANGLES (NOT SHOWN): 00°0'0'0"

THEORETICAL FLAT AREA -

DEVELOPED FLAT AREA -

GENERAL TOLERANCES

ANGLES : ±-°

LENGTHS AND DIAMETERS:
<18 mm. : ±--
18 - 80 mm. : ±---
>80 mm. : ±----

A4

A	new drawing created	Weiß	DGT22450	04.03.31
ZUST	MODIFICATIONS	SIGNATURE	REQUEST	DATE

DESIGN OWNER	DRN	CHD	DATE	DESIGN USERS	EUROPEAN METHOD
DGT	DGR-PE_PD	Weiß / APPR Weiß	04.03.31		

Electrolux

TITLE circuit diagram hob

TITEL Schaltplan Mulde

NUMBER 330 7018 SHEET 01(01) REV A