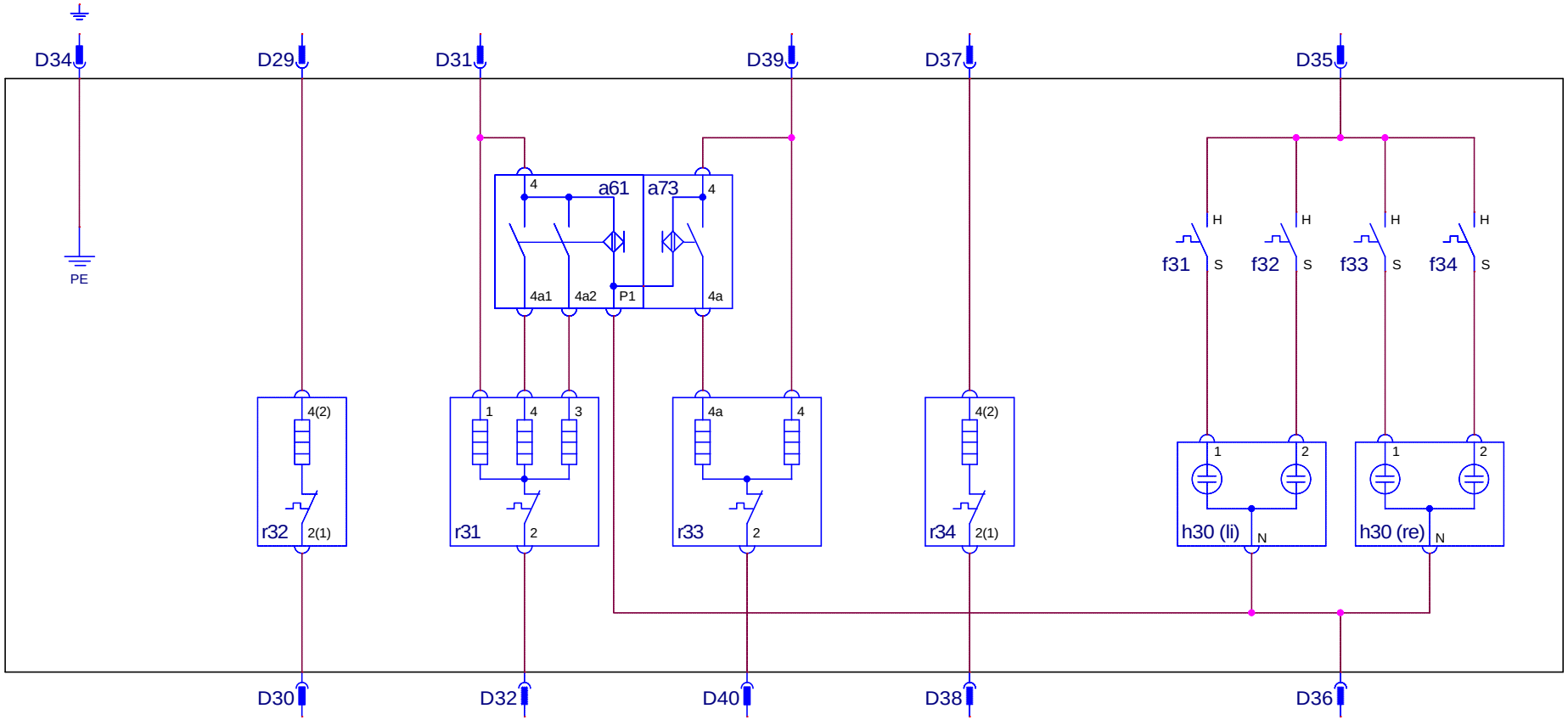

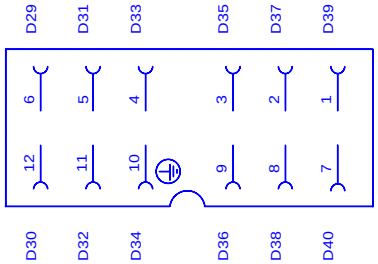

THE ITEM(S) SHOWN IN THIS DRAWING MUST NOT CONTAIN FORMALDEHYDE, CADMIUM, MERCURY, ASBESTOS OR PBB/PBDO.

THIS DRAWING CONTAINS CONFIDENTIAL INFORMATIONS. IT'S PROPERTY OF ELECTROLUX WITHOUT WHOSE PERMISSION IT MAY NOT BE COPIED, SHOWN OR HANDED TO A THIRD PARTY OR OTHERWISE USED, AND IT IS TO BE RETURNED PROMPTLY UPON REQUEST TO ELECTROLUX WHICH IS RESPONIBLE FOR THE DRAWING.

[2] CRITICAL DIMENSIONS WHICH MUST BE UNDER CAPABILITY

SAFETY RISKS

VISIBLE SURFACES

DRAFT ANGLES (NOT SHOWN): 00°00'00"

THEORETICAL FLAT AREA

DEVELOPED FLAT AREA

GENERAL TOLERANCES

ANGLES : ±-°

LENGTHS AND DIAMETERS:
<18 mm. : ±-
>18 mm. <80 mm. : ±-
>80 mm. : ±-

A4

A	new drawing created	Georgi	DGT 17838	03-07-02
ZUST	MODIFICATIONS	SIGNATURE	REQUEST	DATE

DESIGN OWNER	DRN	CHD / APPR	DATE	DESIGN / USERS	EUROPEAN METHOD
DGT	DGR-PE_PD	Weiß / Weiß	03-07-02	- / -	

Electrolux

TITLE circuit diagram hob

TITEL Schaltplan Mulde

NUMBER 330 6098 SHEET 01 (01) REV A