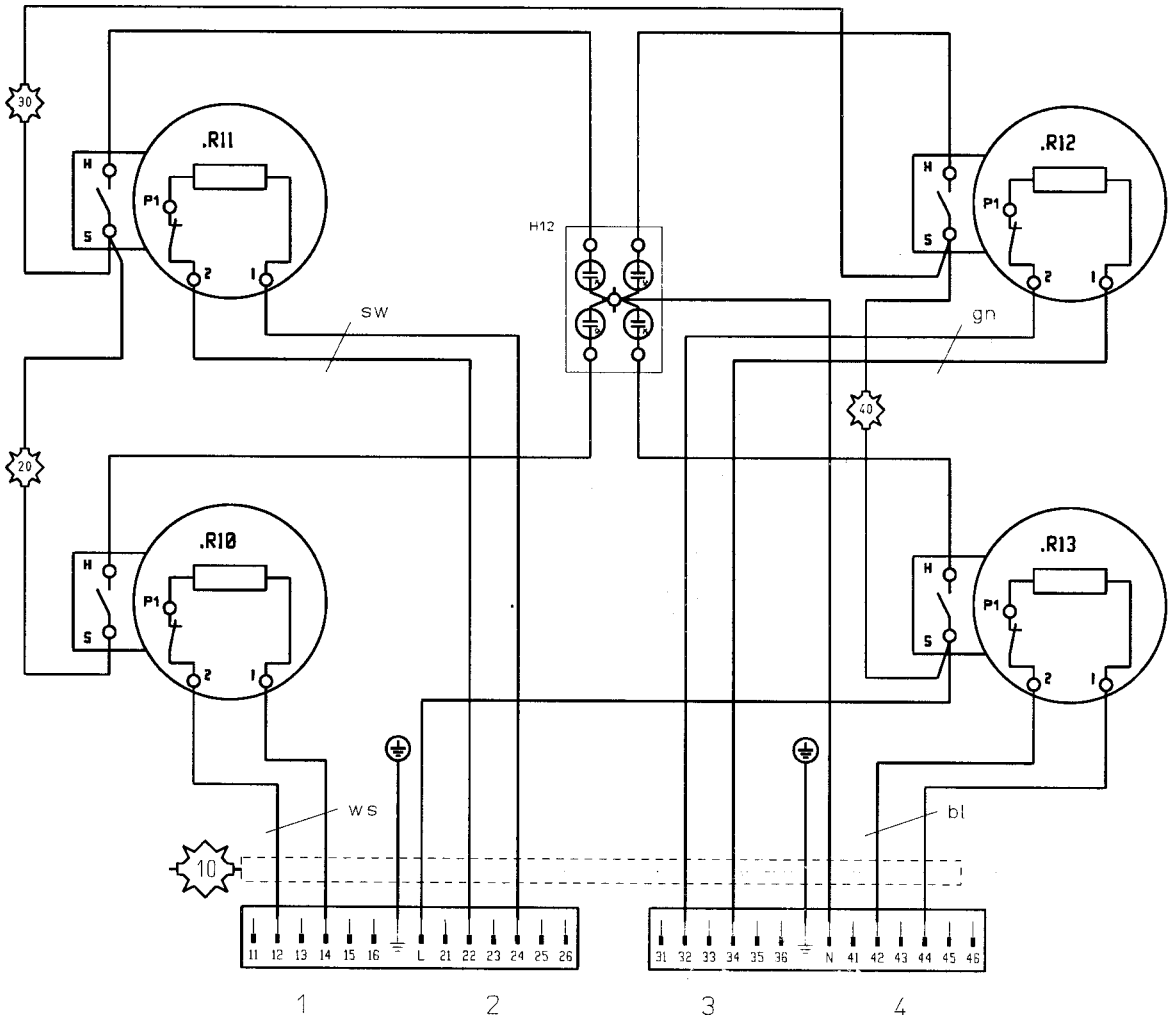
View from top
Ansicht von oben
.R11
.R12
.R10
.R13
H12
sw
gn
ws
bl
30
20
40
10
H
S
P1
2
1
11 12 13 14 15 16 L 21 22 23 24 25 26
31 32 33 34 35 36 N 41 42 43 44 45 46
1
2
3
4

319342400