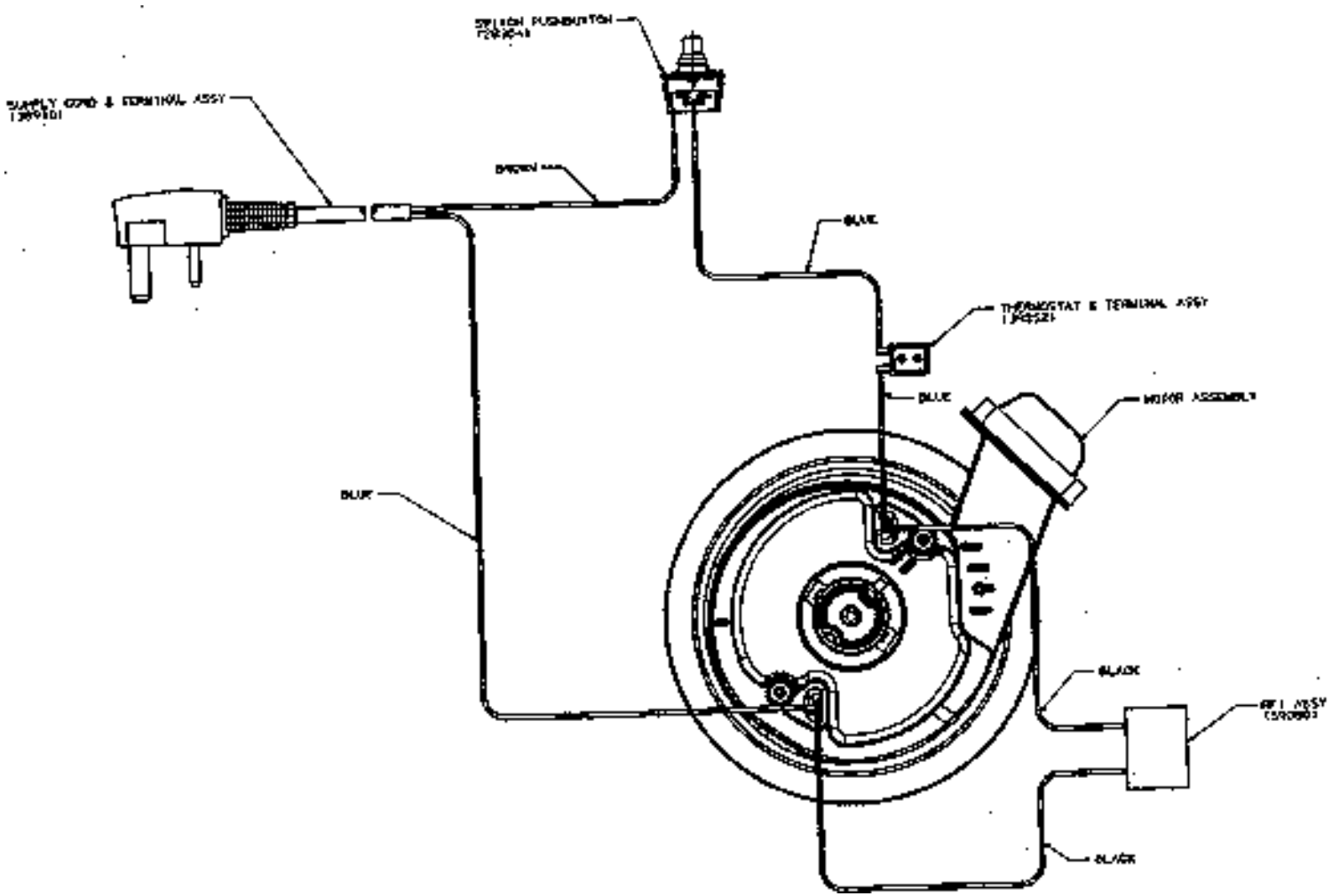
SELECTOR PUSHBUTTON
SUPPLY CORD & TERMINAL ASSY
BROWN
BLUE
THERMOSTAT & TERMINAL ASSY
BLUE
MOTOR ASSEMBLY
BLUE
BLACK
RFI ASSY
BLACK

28427