330 270 500

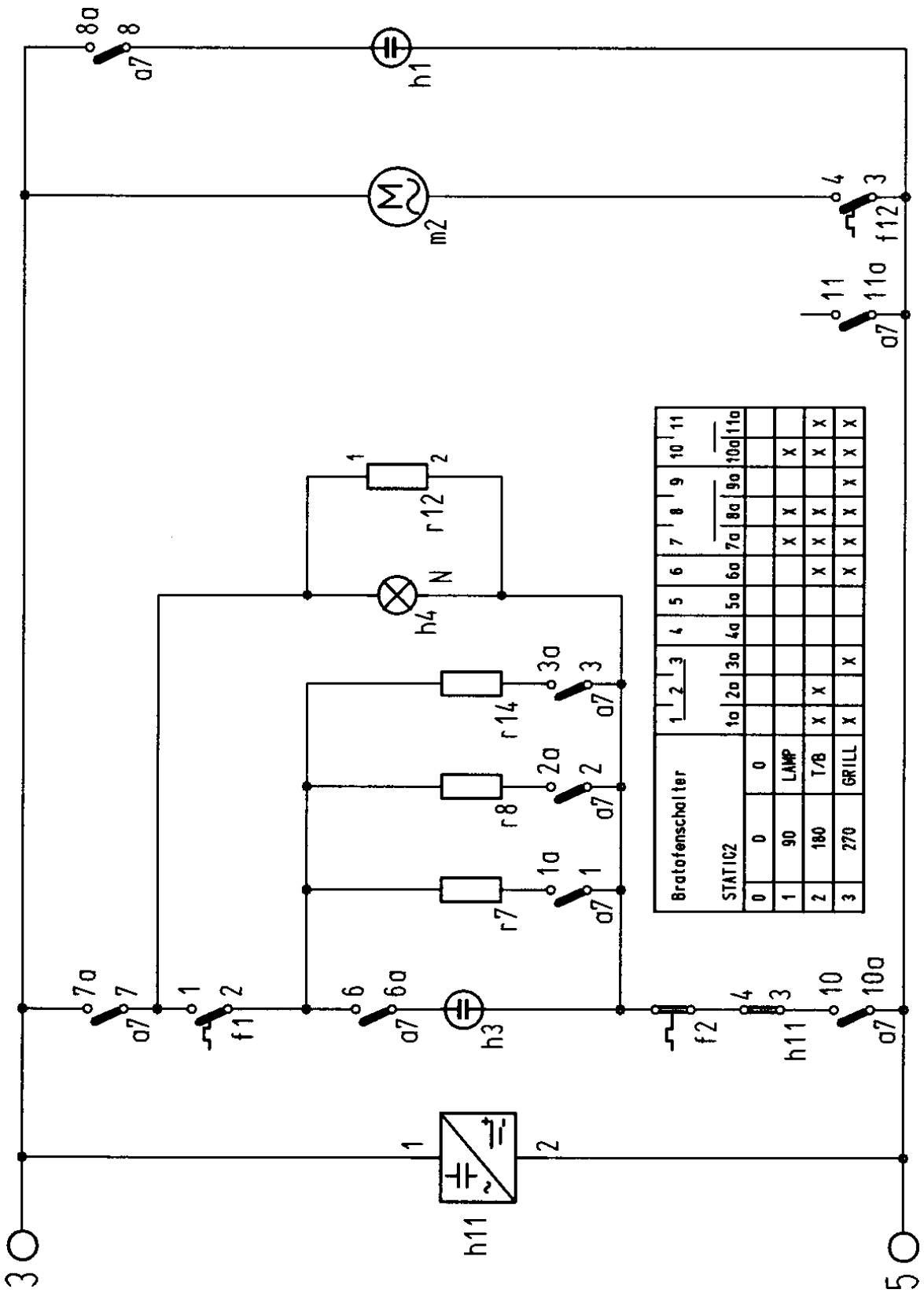

NO292241472